November 22, 2004

Acquisition

Contract Award and Administration for Modular Causeway Systems
(D-2005-021)

Department of Defense
Office of the Inspector General

Quality *Integrity* *Accountability*

Additional Copies

To obtain additional copies of this report, visit the Web site of the Inspector General of the Department of Defense at http://www.dodig.osd.mil/audit/reports or contact the Secondary Reports Distribution Unit, Audit Followup and Technical Support at (703) 604-8937 (DSN 664-8937) or fax (703) 604-8932.

Suggestions for Future Audits

To suggest ideas for or to request future audits, contact Audit Followup and Technical Support at (703) 604-8940 (DSN 664-8940) or fax (703) 604-8932. Ideas and requests can also be mailed to:

ODIG-AUD (ATTN: AFTS Audit Suggestions)
Inspector General of the Department of Defense
400 Army Navy Drive (Room 801)
Arlington, VA 22202-4704

DEPARTMENT OF DEFENSE
hotline

To report fraud, waste, mismanagement, and abuse of authority.

Send written complaints to: Defense Hotline, The Pentagon, Washington, DC 20301-1900
Phone: 800.424.9098 e-mail: hotline@dodig.osd.mil www.dodig.osd.mil/hotline

Acronyms

ATCOM	Army Aviation and Troop Command
DCMA	Defense Contract Management Agency
FAR	Federal Acquisition Regulation
MCS	Modular Causeway System
ORD	Operational Requirements Document
PQDR	Product Quality Deficiency Report
TACOM	Tank-automotive and Armaments Command

INSPECTOR GENERAL
DEPARTMENT OF DEFENSE
400 ARMY NAVY DRIVE
ARLINGTON, VIRGINIA 22202–4704

November 22, 2004

MEMORANDUM FOR DIRECTOR, DEFENSE CONTRACT MANAGEMENT AGENCY
AUDITOR GENERAL,
DEPARTMENT OF THE ARMY

SUBJECT: Report on Contract Award and Administration for Modular Causeway Systems (Report No. D-2005-021)

We are providing this draft report for information and use. This report is one in a series of audits performed in response to a congressional request and allegations made to the Defense Hotline. No written response was required, and none was received. Therefore, we are publishing this report in final form.

We appreciate the courtesies extended to the staff. For additional information on this report, please contract Ms. Kimberley A. Caprio at (703) 604-9202 (DSN 664-9202) or Ms. Rhonda L. Ragsdale at (703) 604-9347 (DSN 664-9347). See Appendix C for the report distribution. Audit team members are listed inside the back cover.

By direction of the Deputy Inspector General for Auditing:

David K Steensma

David K. Steensma
Assistant Inspector General
for Contract Management

Office of the Inspector General of the Department of Defense

Report No. D-2005-021 **November 22, 2004**
(Project No. D2004CG-0026)

Contract Award and Administration for Modular Causeway Systems

Executive Summary

Who Should Read This Report and Why? The modular causeway system program manager and personnel at the Defense Contract Management Agency as well as users of the modular causeway system and the personnel in change of management of funds for the modular causeway system should read this report.

Background. This report addresses allegations related to the Army acquisition of the modular causeway system. A second report will discuss allegations related to the Navy lighterage system. Senator Pete V. Domenici forwarded an inquiry that contained allegations relating to procurement of the modular causeway system. The Army used the modular causeway system to assist with its mission to offload cargo and warfighting materials from vessels upon their arrival in a theater of operations. The modular causeway system was used when the shore area facility did not have enough water depth for vessels to load and unload cargo directly onto land. The modular causeway system consisted of four subsystems: roll-on/roll-off discharge facility, causeway ferry, floating causeway, and warping tug.

From 1992 through 2003, the Army awarded a total of five contracts and used two interagency agreements for the modular causeway system; however, only two contracts, the December 1992 and May 2001, were for the procurement of the modular causeway systems. The remaining three contracts and two interagency agreements were for either the payment of royalties for the use of the patent for the side-to-side connector or for refurbishment of the modular causeway system components. As of March 2004, the Army had spent $48.9 million on the current May 2001 modular causeway system contract.

The complainant identified numerous allegations that we summarized and categorized into four primary allegations: contract award and administration of the May 2001 modular causeway system, connector reliability and safety of the connectors used to fasten components of the modular causeway system together, materiel release of the four subsystem of the modular causeway systems, and Federal funds management.

Results. Although we partially substantiated the allegations regarding the modular causeway system, the Army had already initiated corrective actions. Specifically we:

- did not substantiate the allegations relating to contract award and administration,
- partially substantiated the allegations regarding the reliability and safety of the connectors used to fasten components of the modular causeway system together,

- partially substantiated the allegations regarding the materiel release of the four subsystems of the modular causeway system, and

- did not substantiate the allegations that Army Tank-automotive and Armament Command did not properly manage Federal funds.

The reasons we were only able to partially substantiate the allegations were two-fold. Specifically, the allegations were directed at the FY 2001 contract, but could only be substantiated as they related to the FY 1993 contract. Army Tank-automotive and Armament Command took actions between the FY 1993 contract and the FY 2001 contract award to resolve issues identified in the allegations.

The Tank-automotive and Armaments Command and Lake Shore, Inc., (the contractor) took actions to correct the reliability and safety concerns and set in place procedures, tests, and inspections with the contractor to ensure the production concerns did not occur again. The Tank-automotive and Armament Command expended an additional $5.9 million for corrective actions to ensure that the modular causeway system met the operational requirements. See the Finding section for a discussion of the four categories of allegations and audit results.

Management Comments. We provided a draft of this report on October 18, 2004. No written response to this report was required, and none was received. Therefore, we are publishing this report in final form.

Table of Contents

Executive Summary i

Background 1

Objectives 3

Finding

Modular Causeway System Allegations 5

Appendixes

A. Scope and Methodology 19
Prior Coverage 20
B. Components of the Modular Causeway System 21
C. Report Distribution 24

Background

This report is the first of two reports resulting from a congressional request from Senator Pete V. Domenici and allegations made to the Defense Hotline. Both inquiries contained a series of allegations relating to acquisition of the Army modular causeway system (MCS). The allegation stated that the contract awarded in May 2001 (the FY 2001 contract) for the MCS was awarded based on price instead of best value to Lake Shore, Inc. (Lake Shore). In addition, the allegation stated that the connectors used to fasten components of the subsystems of the MCS were unreliable, unsafe, and contributed to unnecessary risk for the soldier causing the Army to take more than 10 years (after the award of the contract) to obtain materiel release of the four MCS subsystems. Finally, the allegation stated that Army Tank-automotive and Armament Command (TACOM) had not properly managed Federal funds.

Modular Causeway Systems. To accomplish its mission, the Army must offload cargo and warfighting materiel from strategic sealift and commercial vessels upon its arrival in a theater of operations. Offloading is best accomplished in a shore area facility with enough water depth for vessels to load and unload cargo directly onto land. However, there were times when the Army had to perform its offloading mission in waters that were not deep enough to accommodate its cargo vessels. When such shore areas were unavailable the Army used the floating MCS to carry out the offloading mission.

The MCS consisted of four subsystems: roll-on/roll-off discharge facility, causeway ferry, floating causeway, and warping tug. Each subsystem was made up of a group of interoperable and interchangeable floating sections, and each section consists of one or more individual modules. To create the various sizes and configurations needed to build a subsystem, such as the floating causeway, the individual modules were connected by either side-to-side or end-to-end connectors. The following figure depicts a floating causeway subsystem. See Appendix B for more information on the four MCS subsystems and the individual components of the side-to-side connectors.

Floating Causeway subsystem

MCS Users and Management Responsibilities. The 331st Transportation Company, located at Fort Eustis, Virginia, was the primary user of the MCS. Until 1997, the Army Aviation and Troop Command (ATCOM) was responsible for MCS contracting and program management. In 1997, ATCOM closed as part of the Base Realignment and Closure process, and the TACOM took over as the program manager and the procuring and administrative contracting officer for MCS. For the MCS, the Defense Contract Management Agency (DCMA) had the responsibility for the materiel inspection and acceptance for the Army from Lake Shore.

MCS Contracts and Related Actions. From 1992 through 2003, the Army awarded a total of five contracts, used two interagency agreements, and revised the operational requirements document (ORD) related to the MCS.

- In FY 1993 (December 1992), ATCOM competitively awarded a firm-fixed-price contract (DAAK01-93-D-0007) (the FY 1993 contract) for $30.2 million to Lake Shore. The contract was for the procurement of 10 powered sections, 14 combination beach and sea end sections, and 56 individual sections[1] as test and developmental units to explore alternative solutions for meeting the offloading mission of the Army and to identify any potential enhancement for future procurements. The FY 1993 contract was completed in October 1997. Over the life of the FY 1993 contract ATCOM and TACOM made approximately 28 modifications to the contract including changes to funding requirements and delivery schedules; adding new contract line items; and clarifying purchase description, modifications, and engineering changes.

- In May 1996, ATCOM awarded a sole-source firm-fixed-price contract (DAAK01-96-01-0049) to Robishaw Engineering, Inc., (Robishaw) for $1 million to pay royalties for the use of the patent for the side-to-side connectors used on the MCS. The royalties were only paid if the Robishaw patent for the side-to-side connector was used in the design of the MCS.

- In August 1999, the Army revised the MCS ORD to meet additional operational needs and enhancements. The revised ORD specified new MCS performance parameters identified during testing of the components purchased under the FY 1993 contract.

- From 1999 through 2003, TACOM used two interagency agreements with the Department of Transportation and issued two contracts to refurbish and upgrade the assets that the Army had procured under the FY 1993 contract to meet the new requirements outlined in the August 1999 ORD. The interagency agreements and contracts are as follows:

[1] The causeway ferry is composed of individual powered and nonpowered sections and each section is made up of nine smaller modules.

- In 1999, TACOM used interagency agreement DTRS57-99-X-00022 with the Department of Transportation for $2.3 million this includes the refurbishment of 27 modules from the FY 1993 contract, which were located at Fort Eustis, Virginia. The Department of Transportation was required to sandblast and repaint the interior and exterior of the modules, perform visual inspections of the structural condition, and provide a written inspection report of the state of each module. Of the $2.3 million, only $540,000 was used to repair the 27 modules. The remaining funds were used to engineer and fabricate components of the roll-on/roll-off discharge facility, warping tug, causeway ferry, and floating causeway systems.

- In 2002, TACOM used a second interagency agreement, DTRS57-02-X-70013, with the Department of Transportation for $2.2 million to refurbish 118 modules from the FY 1993 contract, which were located at Fort Eustis, Virginia. The Department of Transportation was again required to sandblast and paint the interior and exterior of the modules, perform visual inspections of the structural condition, and provide a written inspection report of the state of each module.

- In 2002, TACOM awarded contract DABT57-99-D-0035 for $795,830 to Metal Trades, Inc., to clean, paint, and repair 168 modules from the FY 1993 contract, which were located at Fort Eustis, Virginia. The purpose of this contract was to refurbish modules to ensure continued functionality.

- In 2003, TACOM awarded contract DABT57-99-D-0034 for $570,397 to Davis Boat Works, Inc., to clean, paint, and repair 67 modules from the FY 1993 contract, which were located at Fort Eustis, Virginia; Baltimore, Maryland; and Rhinelander, Wisconsin. The purpose of this contract was to refurbish modules to ensure continued functionality.

- In May 2001, TACOM competitively awarded a firm-fixed-price contract (DAAE07-01-D-T026) (the FY 2001 contract) with one base year and two 1-year options period to Lake Shore for approximately $64.3 million for the construction of the MCS to include all four subsystems. The new systems were also to be compatible and interchangeable with already existing systems in the Army inventory. As of March 2004, TACOM had spent $48.9 million and had exercised both options.

Objectives

The overall audit objective was to determine whether contract award and administration policies and procedures were properly followed for the acquisition of the MCS. Specifically, we evaluated contract award and administration of the

May 2001 modular causeway systems, connector reliability and safety of the connectors used to fasten components of the modular causeway system together, materiel release of the four subsystem of the modular causeway system, and Federal funds management. See the Finding section for a discussion of the four categories of allegations and audit results. See Appendix A for a discussion of the scope and methodology and for prior coverage related to the objectives.

Modular Causeway System Allegations

We partially substantiated the allegations regarding the modular causeway system. Specifically we:

- did not substantiate the allegations relating to contract award and administration,
- partially substantiated the allegations regarding the reliability and safety of the connectors used to fasten components of the modular causeway system together,
- partially substantiated the allegations regarding the materiel release of the four subsystems of the modular causeway system, and
- did not substantiate the allegations that TACOM did not properly manage Federal funds.

The reasons we were only able to partially substantiate the allegations were two-fold. Specifically, the allegations were directed at the FY 2001 contract, but could only be substantiated as they related to the FY 1993 contract. Second, TACOM took actions between the FY 1993 contract and the FY 2001 contract award to resolve issues identified in the allegations.

Allegations Related to the MCS

The complainant identified numerous allegations that stated that the connectors used to fasten components of the subsystems of the MCS were unreliable, unsafe, and contributed to unnecessary risk for the soldier causing the Army to take more than 10 years (after the award of the contract) to obtain materiel release of the four MCS subsystems. We categorized the allegations into four primary allegations: contract award and administration, connector reliability and safety, materiel release, and management of Federal funds.

Contract Award and Administration

Source Selection Regulations. The Federal Acquisition Regulation (FAR) prescribes guidelines for source selection. FAR 2.101, "Definitions," defines best value as the expected outcome of an acquisition that, in the Government's estimation, provides the greatest overall benefit in response to the requirement. FAR Subpart 15.3, "Source Selection," states that the award decision is based on evaluation factors and significant subfactors that are tailored to the acquisition.

The evaluation factors and significant subfactors that apply to an acquisition and their relative importance are within the broad discretion of agency acquisition officials, subject to the following requirements:

- Price or cost to the Government shall be evaluated in every source selection.

- The quality of the product or service shall be addressed in every source selection through consideration of one or more noncost evaluation factors, such as past performance, compliance with solicitation requirements, technical excellence, management capability, personnel qualification, and prior experience.

- Except when not appropriate, past performance shall be evaluated in all source selections for negotiated competitive acquisitions expected to exceed $1,000,000.

FAR Subpart 15.304(d) states that while the rating method need not be disclosed, all factors and significant subfactors that will affect contract award and their relative importance should be stated clearly in the solicitation. The general approach for evaluating past performance information should be described. In addition, the solicitation should also state, at a minimum, whether all evaluation factors other than cost or price, when combined, are significantly more important, approximately equal to, or significantly less important than cost or price.

Contract Award Allegation. The allegation stated that the source selection decision was flawed, and the Army improperly awarded the FY 2001 contract (DAAE07-01-D-T026) based on price rather than best value. Specifically, the allegation stated that TACOM failed to do the following:

- Consider the technical component of the MCS proposals to determine which contractor offered the best value.

- Consider known safety and reliability problems with the side-to-side connector when awarding the "sole-source" contract DAAK01-96-C-0049.

- Require that the Lake Shore proposal be in compliance with the specifications outlined in the request for proposals.

- Require that the MCS be properly tested in water.

- Require that Lake Shore provide a warranty for the connector.

Audit Results. We did not substantiate that the Army awarded the FY 2001 contract based on price rather than best value, and we could not substantiate the five specific allegations, as stated above.

Source Selection Evaluation Plan. We determined that TACOM complied with the FAR Part 15.3 in defining source selection criteria in the solicitation. Specifically, the solicitation stated that the proposals would be rated

on four source selection evaluation factors. In order of importance, the factors were: technical merit, price, ability to logistically support the system, and past performance and use of small business. Technical merit was composed of two factors, design and integration and production capability. Evaluation factors other than price when combined were significantly more important than price.

Based upon a review of the Source Selection Authority decision documents, TACOM consistently applied the source selection criteria as defined in awarding the contract to Lake Shore.

Source Selection Decision. In response to the request for proposal for the FY 2001 contract, TACOM received bids from five contractors. In accordance with the source selection evaluation plan, TACOM eliminated three contractors, two for failing to provide proposal information as specified in the request for proposal and one for being outside of the competitive range. The source selection board evaluated the remaining two bidders based upon the four established source selection evaluation criteria. Using the four evaluation factors, the source selection board ranked the remaining proposals using a five-scale rating ranging from "excellent," very low risk, to "poor," very high risk.

The source selection board concluded that both contractors (Contactors A & B) were equally low risk for: technical, logistics, and past performance and small business utilization evaluations, therefore, the deciding evaluation factor was price. TACOM awarded the FY 2001 contract to Contractor B based on obtaining the best value at a low risk and for the lowest price. The following table shows the results of the source selection board evaluation of the final two proposals.

Evaluation of the Final Two Contractors for the FY 2001 Contract

	Technical	Logistics	Past Performance/ Small Business	Price (in millions)
Contractor A	Excellent	Excellent	Excellent	$75.6
Risk	Very Low	Very Low	Very Low	
Contractor B	Excellent	Excellent	Good	$63.5
Risk	Very Low	Very Low	Low	

Consideration of Technical Components. The allegation stated that in determining best value, TACOM failed to consider the connector system, which

the complainant felt, constituted the single most important technical component of the entire MCS system. Specifically, concerning the technical components, the allegation stated that:

- Lake Shore did not comply with the technical requirements of the solicitation for the connector, and

- TACOM did not adequately evaluate the connector design when assessing the Lake Shore proposal during the source selection process.

Technical Considerations in Solicitation. We did not substantiate the allegation. TACOM did "advertise" that the MCS, which includes the connector, would be used in salt water. The purchase description stated that the MCS should be capable of operating in an open ocean environment and should be "corrosion resistant" or treated with "corrosion resistant" materials. During the source selection evaluation of the proposals for the FY 2001 contract, TACOM reviewed every proposal to determine that it met the requirements outlined in the purchase description. TACOM specifically looked at the contractor's manufacturing plan, which would identify the materials that were used in the production of the MCS. TACOM determined that the Lake Shore proposal did meet the requirements outlined in the purchase description. In addition, according to TACOM engineers, as well as engineers at the Office of the Inspector General for the Department of Defense, the use of corrosion resistant materials would be sufficient regardless of water type.

Technical Considerations During Source Selection. Based on a review of the Source Selection Authority decision, TACOM complied with the solicitation regarding technical requirements. Despite the different approaches, the Source Selection Authority rated both proposals as "Excellent and Very Low Risk" in the technical evaluation area. However, TACOM concluded that the Lake Shore overall technical proposal reflected less risk and was more advantageous than the other contractor.

The Source Selection Authority supported its decision to award the FY 2001 contract to Lake Shore because the Lake Shore technical approach was based on substantially proven design and established manufacturing processes and procedures. According to the decision document, Lake Shore "demonstrated a thorough understanding of the current MCS already in the Army's inventory, and had previously manufactured MCS, therefore the newly purchased modules should be interoperable and interchangeable with existing MCS modules." The Source Selection Authority decision further stated that the Lake Shore design and integration approach provided very low risk of failing to meet speed, maneuverability, transportability, and interoperability requirements.

By comparison, according to the Source Selection Authority decision, the competing contractor would require reverse engineering of existing MCS hardware to achieve performance and design requirements and the use of statistical sampling of existing MCS hardware in order to facilitate interoperability.

Safety and Reliability. The allegation stated that TACOM failed to consider connector safety and reliability problems when awarding the May 1996 contract to Robishaw. We did not substantiate the allegation. The contract in question was initially awarded by ATCOM for $1 million, and the purpose of the contract was solely to pay patent royalties for the use of the Robishaw side-to-side connectors used for the MCS purchased under the FY 1993 contract. The May 1996 contract discussed in the allegation did not address safety and reliability of the connector because it was issued to pay patent royalties to Robishaw for the connector design.. ATCOM and TACOM only made payments on this contract if a patented Robishaw connector was used. TACOM issued the May 1996 contract because under the FY 1993 contract Lake Shore reverse engineered the connector and neither the Lake Shore proposals nor TACOM contracts (both FY 1993 and FY 2001) included the cost of the patent royalties.

Compliance with Contractor Specifications. The allegation stated that Lake Shore violated contract law by not certifying that their bid was in accordance with the purchase description. The allegation further stated that TACOM's failure to require that Lake Shore comply is also a violation of contract law as well as a demonstration of a conflict of interest. We did not substantiate the allegation. The FAR does not require that a bidder certify that their bid is in compliance with a purchase description. However, TACOM included in the solicitation for the FY 2001 contract, under "Area I — Technical," that the contractor is required to "include a statement in its proposal indicating that the proposal is in compliance with the purchase description." Lake Shore complied with the TACOM requirement and did provide the requisite certification statement in its proposal.

Testing of MCS in Water. The allegation stated that TACOM did not properly test the system before acceptance because the government accepted the system at the Lake Shore plant located in Iron Mountain, Michigan, which is not accessible to water. Testing on water is critical prior to acceptance.

We did not substantiate the allegation that TACOM was accepting the MCS without properly testing the system in water. According to the test procedures developed by Lake Shore in order to pass the interoperability and compatibility tests, which are part of the first article test, the system must be tested in water. The interoperability test should be performed in water after sections of the MCS are assembled. The compatibility test requires that the powered section of the MCS be assembled and operated through a full range of speed in the water. Lake Shore provided TACOM the results of the interoperability and compatibility tests, in the MCS First Article Test Report, September 17, 2002, which showed that Lake Shore with TACOM observing, tested the MCS in salt water, in Norfolk, Virginia. The tests were to evaluate the interoperability and compatibility of the modules. The interoperability test was completed in November 2001. The First Article Test Report stated that the MCS was compatible with other watercraft and the 1993 modules under different offloading conditions. The compatibility test was completed in September 2001 and determined that each module from the FY 2001 contract was completely interchangeable between the individual subsystems. Both the interoperability and compatibility test were successfully conducted and completed prior to TACOM accepting the first subsystem in August 2002.

Warranties. The allegation stated that Lake Shore did not warrant the connector because Lake Shore was only passing through commercial warranties to the Army. We did not substantiate the allegation. The FY 2001 contract Clause H.25, "Warranty," did state that the contractor shall identify and pass through to the Government any commercial warranty for the components, parts, modules, and sections of the MCS.

However, TACOM issued a modification to the FY 2001 contract (Supplemental Information) that required Lake Shore to provide a warranty of the MCS and its components for 9 months from the date of acceptance. Specifically, Lake Shore warranted its MCS products to be free of materiel and workmanship defects on proper preservation and storage as defined in Lake Shore packaging and preservation instructions. Therefore, in accordance with the contract, Lake Shore agreed to not only pass commercial warranties on to the Government, but Lake Shore also warranted the system for 9 months after acceptance.

Connector Reliability and Safety

Allegations Regarding Reliability and Safety. The allegation stated that the connectors used on the MCS were unreliable and unsafe and contributed unnecessary risk for soldiers for the following reasons. The connectors

- were by design for fresh water and not appropriate for salt water use,
- were not corrosion resistant and could not be adequately painted with corrosion resistant material,
- did not have anti-fouling material on components,
- did not connect properly to ensure MCS is operational, and
- were unsafe to assemble in uncalm waters without injury to soldiers.

Audit Results. We partially substantiated allegations regarding the reliability and safety. However, the allegations that we substantiated were related to the connectors used on the MCS procured under the FY 1993 contract not the FY 2001 contract. TACOM and Lake Shore took actions to correct the reliability and safety concerns and set in place procedures, tests, and inspections with the contractor to ensure the production concerns did not occur again.

Appropriateness of Connector. The allegation stated that the connectors used in the FY 2001 contract were a fresh water design and not appropriate for salt water.

Applicable for Salt Water Use. We did not substantiate the allegation. The September 2002 purchase description, paragraph 1.1, stated that the MCS would operate in open ocean.

Furthermore, the purchase description, paragraph 3.3.15.1, stated the following to outline the material the MCS should be made of and any needed protection:

> "the MCS components shall be fabricated from compatible materials, inherently corrosion resistant or treated to provide protection against the various forms of corrosion and deterioration that may be encountered in any of the operating and storage environment to which the MCS may be exposed."

The purchase description further required that the connector be made of steel but was silent regarding the type of steel. The purchase description also called for treating the MCS components, as well as the connectors, with two coats of paint and exposed surfaces with preservatives, such as inorganic zinc (a military standard type of corrosion resistant primer) and lubricating grease. In addition, the Army Unit, Direct Support and General Support Maintenance Manual for the Floating Causeway (MCS Maintenance Manual), September 30, 2002, requires the soldiers to remove the MCS from the water after 90 days or upon mission completion for maintenance, which included cleaning and repainting exposed or rusty surfaces and lubricating connector springs, connector bars, and guillotines.

According to engineers at the Office of the Inspector General for the Department of Defense, all types of steel would corrode over time; however, coating the MCS components with inorganic zinc and other preservatives should deter corrosion. In addition, according to a TACOM Quality Assurance Specialist familiar with the MCS, these procedures should provide adequate corrosion protection from salt water.

During the source selection evaluation for technical merit, TACOM evaluated the Lake Shore proposal by considering the proposed material the MCS would be made of and how Lake Shore proposed to ensure the material would be protected from corrosion and other deterioration. In evaluating the Lake Shore proposal TACOM took into consideration the appropriateness of the design for use in salt water.

Corrosion Resistance. The allegation stated that the spring pocket (the well housing the deploying spring) and the area where the square bar is welded into the channel slot of the connectors were either impossible or difficult to paint with corrosion resistant material. (See Appendix B to see the components of the connector and how the components connect together.)

We partially substantiated the allegation. We determined that the spring pocket and the square bar are difficult to paint on the connectors for both the FY 1993 and FY 2001 contracts. Even though these components are difficult to paint, the TACOM Quality Assurance Specialist stated that the spring pocket could be painted during new construction and depot maintenance; however, it is true that the square bar can not be fully painted once welded to the channel slot. The MCS Maintenance Manual requires that both components be greased during routine maintenance as a measure to prevent corrosion. According to the MCS users, the 331st Transportation Company soldiers performed the required maintenance on the MCS connectors, as defined in the MCS Maintenance Manual. The MCS

users stated that they have not experienced corrosion problems, with either the spring pocket or the square bar, on the subsystems that were materiel released to the users.

Anti-Fouling Material on the MCS. The allegation stated that the FY 2001 contract required the MCS to have anti-fouling protection; but the MCS did not have anti-fouling protection[2].

We did not substantiate the allegation. The FY 2001 contract did not require anti-fouling protection coating on the MCS. However, the MCS Maintenance Manual required routine maintenance of the system when removed from the water after 90 days or mission completion, whichever is shortest, to combat growth of marine life. According to the TACOM Quality Assurance Specialist, who is also the MCS Test Director, the inorganic zinc, as required in the purchase description and the MCS Maintenance Manual, coating provided a maintenance-friendly surface that would be easy to clean-off marine life.

Connectors Operational Capabilities. The allegation stated that the connectors were difficult to connect, retracting the connector pins was dangerous to the soldier, and as a result soldiers had been or could be injured.

Connector Difficulties. We did not substantiate the allegation. The connectors were difficult to connect; however, the difficulty was only an issue for connectors that were acquired under the FY 1993 contract. In August 2000, TACOM received two Product Quality Deficiency Reports (PQDR) from the MCS users documenting problems they were having with the connectors on the MCS modules. The purpose of the PQDR was to report deficiencies and unsatisfactory conditions in products, material, or equipment. Specifically, in the PQDR, the MCS users outlined the following two problems with the connectors:

- the connecting pins were not compatible with the modules and required the MCS users to ground down the pin to the appropriate size, and

- the connector casting dimensions were out of tolerance, which required the users to physically jam the connector together.

In response to the PQDR, TACOM issued two interagency agreements with the Department of Transportation, a contract with Metal Trades, Inc., and a contract with Davis Boat Works, Inc., to refurbish approximately 380 modules (for $4.1 million) from the FY 1993 contract. In the refurbishment effort, TACOM had the Department of Transportation and the contractors grind down oversized connector pins to the correct size, adjust the casting dimensions of the connector to the appropriate dimensions, clean and repaint modules, and complete any other repairs needed. Furthermore, to ensure that the problem, outlined in the PQDR, did not resurface again, TACOM initiated a 100 percent screening process, with Lake Shore of all critical sizes and dimensions under the FY 2001 contract. In September 2001, DCMA started conducting the 100 percent screening of the

[2] An anti-fouling protection is material applied to a surface to prevent the growth of marine life, such as barnacles.

critical sizes and dimensions of the modules as part of its inspection and acceptance procedures for modules produced under the FY 2001 contract. As part of the inspection and acceptance procedures, DCMA also randomly conducted compatibility test on the modules to determine whether they were connecting properly with existing modules. In addition, DCMA performed 100 percent reviews of the connector pins to ensure they were the correct size. Because DCMA started accepting modules from the FY 2001 contract, in August 2002 the 100 percent screening of critical sizes and dimensions proved that connector pin sizes and dimensions were correct.

Connector Retraction. The allegation stated that retracting the connector pins was dangerous and soldiers could be injured when performing the task.

We did not substantiate the allegation. Until August 2002 the soldier had to work over the edge of a floating module to retract pins that were below water level. According to the Operator's Manual for the Modular Causeway System, August 1997, retracting the connector pins should be accomplished while the modules are on land; however, there are occasions when the retraction process could be done in water. TACOM had the pin retraction tool developed through work with the Department of Transportation. After a solider expressed concern about having to work over the edge of the modules to retract pins below water level, the pin retraction tool was developed and tested through an agreement between TACOM and the Department of Transportation and was provided to MCS users in August 2002. The pin retraction tool was used to retract the lower pins, located below the water, when in rare instances someone mistakenly lifted the guillotine from the module without protective fenders. According to TACOM personnel and the MCS users, with the introduction of the pin retraction tool, soldiers no longer had to lean over the edge of the module to retract the connector pins, which made the task safer.

Accidents and Injuries Related to the Use of the MCS Connectors. The allegation stated that because the connectors were unreliable and unsafe there were injuries to the soldiers and there could be more injuries and possibly fatalities.

We did not substantiate the allegation. According to Army Safety Center[3] personnel and MCS users Safety Office, there were accidents and injuries relating to operating the MCS, but none were attributed to a failed, unreliable, or unsafe connector. The Army Safety Center and the MCS users Safety Office attributed the accidents and injuries on the MCS to weather conditions, crane operations moving the modules, vessels hitting the modules, and improper or inappropriate operation of equipment.

TACOM Initiatives to Resolve Substantiated Allegations. The allegations attributed the safety and reliability problems to the connectors procured under the FY 2001 contract. The complainant is correct that safety and reliability problems

[3] The Army reports accidents by using the Accident Report (Form DA 285), which is sent and processed through the Army Safety Center, Fort Rucker, Alabama. The mission of the Army Safety Center is to review, investigate, and research reported accidents and serves as the primary advisor to the Army on accident prevention.

occurred. However, those problems occurred with MCS components procured under the FY 1993 contract, not the FY 2001 contract. Furthermore, the safety and reliability problems have not occurred in the current MCS production under the FY 2001 contract. This is for multiple reasons, specifically:

- TACOM worked with Lake Shore in June 2001 to address production problems by instituting quality control processes to ensure production in accordance with the purchase description.

- From September 2001 through September 2002, TACOM and Lake Shore successfully conducted first article testing on subsystems produced under the FY 2001 contract.

- From September 2001 through September 2002, DCMA screened 100 percent of the critical sizes and dimensions of the connectors as well as randomly tested the modules for compatibility with existing modules.

According to MCS users, they have not experienced any major failures or corrosion problems with the subsystems that have been material released to them.

Materiel Release of the MCS Subsystems

Criteria for Materiel Release. Army Regulation 700-142, "Materiel Release, Fielding, and Transfer," May 1, 1995, states that materiel release is the process the Army uses to make sure material is suitable and supportable before release to the field. Materiel release is beyond just accepting the assets from the developer. The materiel release process is critical since it is the "final gate," material should be safe, meet performance requirements, and be logistically supportable. When deficiencies with equipment are identified during the materiel release process, materiel developers must conditionally release equipment and track the deficiencies on the systems "get-well" plan until they resolve the deficiencies. Equipment released under conditional release is limited to users with urgent requirements. When all deficiencies are resolved, the materiel developer can obtain full release and issue the material to all users.

Allegation Regarding Materiel Release. The allegation stated that, due to unreliable and unsafe connectors, TACOM could not obtain materiel release of the four MCS subsystems for more than 10 years after the award of the FY 1993 contract.

Audit Results. We partially substantiated the allegation. According to TACOM records, the following are the materiel release dates for the MCS subsystems, including portions from the FY 1993 contract:

- roll-on/roll-off discharge facility – August 2002,

- floating causeway – August 2002,

- warping tug – December 2003, and
- causeway ferry – TACOM plans to materiel release in September 2005.

The allegation is correct in that TACOM had not obtained materiel release on the four MCS subsystems more than 10 years after the award of the FY 1993 contract. However, only the causeway ferry was procured under the FY 1993 contract. Materiel release was delayed because the causeway ferries under the FY 1993 contract failed the initial first article test, and the Army expanded its combat materiel offloading mission. Furthermore, through testing done on the causeway ferry, the Army identified additional requirements for the program and the assets purchased under the FY 1993 contract were updated to include those requirements. Finally, the assets purchased under the FY 1993 contract were refurbished to correct several production failures and to remove corrosion from the modules and repaint them.

Items Purchased Under the FY 1993 Contract. The FY 1993 contract with Lake Shore was for the purchase of 10 power sections, 14 combined beach and sea end section and 56 intermediate sections. The FY 1993 contract did not include requirements for the remaining three subsystems — roll-on/roll-off discharge facility, floating causeway, or warping tug. These three subsystems were instead procured under the FY 2001 contract. As such, 2002 and 2003 materiel release dates for those subsystems was not unreasonable. The sections purchased under the FY 1993 contract were used to test, explore alternative solutions, prove out the technology, and identify potential enhancements to meet the operational requirements defined in the operational requirement document. The only aspect of the FY 1993 contract the Army initially planned to materiel release was the causeway ferry.

Causeway Ferry Materiel Release. Under the FY 1993 contract the Army planned to materiel release the causeway ferries, but was delayed for several reasons. The materiel release of the causeway ferries purchased under the FY 1993 contract were delayed because the causeway ferries failed the first article test and there were changes to the Army offloading mission. Also, because of the testing done on the causeway ferry, the Army identified additional requirements for the program and the assets purchased under the FY 1993 contract were updated to include those requirements. Finally, the assets purchased under the FY 1993 were refurbished to correct the identified production failures, to remove corrosion, and to repair and repaint the modules.

First Article Test Results. According to the U.S. Army Aberdeen Test Center report, "Abbreviated Report for the First Article Test of the Modular Causeway Ferry," August 1998, Lake Shore started conducting the first article testing process on the FY 1993 contract causeway ferry in May 1995. Preliminary test results indicated that the causeway ferry did not meet the Independent Assessment Plan, which was an overall plan, generated by the Army Aberdeen Test Center, to accomplish the test and evaluation of the system. This test and evaluation is part of the materiel release process requirement. Lake Shore then requested a postponement of the first article test for a redesign effort. The U.S. Army Aviation and Troop Command granted the postponement request

and the causeway ferry was temporarily withdrawn from testing for design modifications. Testing of the modified causeway ferry was then rescheduled for Spring 1996. The 1996 test results identified additional issues with the causeway ferry that did not meet the purchase description requirements. Additional testing to cover the remaining first article test requirements was planned for later dates in 1997, but was subsequently postponed. These tests, including beaching and retracting tests, were eventually merged with the first article test of the assets purchased under the FY 2001 contract. However, none of the issues addressed in the U.S Army Aberdeen Test Center report related to reliability and safety of the side connectors.

Changes to Army Mission. In addition to the initial failed first article test, the Army expanded its offloading mission to be accomplished without the Navy participation. Prior to the early 1990's, the Army depended on the Navy Landing Ships Tank and the Navy Lighterage Causeway to offload its combat materiel into theater. However, as the Navy Landing Ships Tanks were decommissioned and the joint military doctrine changed from the Navy being first in theater to the Army performing its own offloading of materiel from either Army or commercial ships. Furthermore, as a result of the first article test failure and the changes in Army mission, in August 1999 the U.S. Army Training and Doctrine Command revised the MCS ORD to further define the capabilities needed to accommodate the changes. Specifically, the revised MCS ORD required a modified ramp called the causeway ferry beach end, which was attached to the end of the causeway ferry, to facilitate the offloading of combat material to shore. The revised MCS ORD also expanded the sizes of the roll-on/roll-off discharge facility and the floating causeway to maximize cargo throughput. In addition, the MCS needed to be capable of transporting material from the ship to shore through a minimum of sea state[4] two and maximum of sea state three. In an effort to ensure that the materiel released subsystems met these requirements, TACOM had any needed upgrades done to the modules.

Corrosion on the MCS Modules Due to Materiel Release. Even though there are processes and procedures in place to ensure that the MCS is properly maintained and kept free of corrosion, rust, and marine life, TACOM had to refurbish the modules purchased under the FY 1993 contract partially because of problems of corrosion, rust, and marine life on the MCS components. The quality assurance specialist attributed the heavy corrosion, rust, and marine life on the MCS components to the users having the system without a proper materiel release and not maintaining the system properly. Because the MCS modules had not been officially materiel released to the users, they did not have the proper tools and training to conduct proper maintenance on the modules. In addition, according to the Army Audit Report AA99-4111, "Materiel Release," September 1999, the MCS was not materiel released because other activities didn't accomplish some prerequisites to release. Furthermore, the report stated that because the user had an urgent need for the equipment, the materiel developer issued the system to the users on a hand receipt. The report recommended that all project-managed programs be required to go through the materiel release process.

[4] Sea state is a scale that categorizes the forces of progressively higher seas by wave height.

In 2000, TACOM personnel, with assistance from the Department of Transportation, conducted a complete and in-depth review of the MCS modules in the possession of the MCS users and made a determination that the majority of the modules were not in good condition and would need to be refurbished to bring them back to an operational condition. TACOM subsequently instituted a refurbishment effort to have the corroded and rusted modules cleaned, painted, and repaired. The refurbishment effort was conducted through two interagency agreements with the Department of Transportation and two contracts with Metal Trades and Davis Boat Work. TACOM used the refurbishment effort to prepare the modules purchased under the FY 1993 contract for the materiel release process. TACOM paid a total of $4.1 million for the two interagency agreements and the two refurbishment contracts to have the 380 modules (from the FY 1993 contract) cleaned and repaired.

Current Status of Materiel Release of MCS Subsystems. According to the Materiel Fielding Plan, there was a shift in priority from the causeway ferry being the highest priority to the roll-on/roll-off discharge facility and warping tug being the highest priority. As a result, the materiel release effort was also shifted. Currently, the Army has successfully materiel released the following subsystems: roll-on/roll-off discharge facility, floating causeway, and warping tug. The materiel release of the causeway ferry was pending incorporation of the causeway ferry beach end component into the technical manuals. TACOM and Lake Shore have successfully tested the causeway ferry beach end component, as part of the FY 2001 contract, and plan to materiel release the causeway ferry in September 2005.

Management of Funds for MCS

Fund Management Allegations. The allegation stated because of the MCS connector reliability and safety issues TACOM mismanaged Federal funds by expending additional funds for repairs and to repaint the connectors.

Audit Result. We did not substantiate the allegation. The Army expended $30.2 million on the FY 1993 contract to procure 10 powered sections, 14 combined beach and sea end sections, and 56 intermediate sections. Then from 1993 through 2001, the Army expended a total of approximately $4.1 million on interagency agreements and contracts to refurbish the modules purchased under the FY 1993 contract. The $4.1 million[5] was for both repairing the connector pin sizes and the connector casting dimensions as well as for cleaning and repainting the modules as part of a refurbishing effort of the modules purchased under the FY 1993 contract.

The FY 2001 contract was awarded for $64.3 million. However, as of March 2004, $48.9 million had been expended. The combination of total costs for the FY 2001 contract of $64.3 million plus the $4.1 million expended for

[5] The $4.1 million includes the cost for both interagency agreements with the Department of Transportation (totaling $2.7 million) and the contracts with Medal Trades, Inc., ($795,830) and Davis Boat Works, Inc., ($570,397).

refurbishment of the FY 1993 modules is less than contract costs of $75.6 million proposed by the other contractor (Contract A) from the source selection evaluation.

Conclusion

TACOM awarded the FY 2001 contract to Lake Shore in accordance with the source selection evaluation criteria and fully considered the design of the connector in making the selection. However, TACOM did incur reliability and safety concerns with the connectors acquired under the FY 1993 contract, but not under the FY 2001 contract. Even though there were reliability and safety concerns with the FY 1993 assets, TACOM (once it became the program manager) took corrective action to correct the reliability and safety issues relating to the modules procured under the FY 1993 contract. In addition, TACOM and Lake Shore set in place procedures, tests, and inspections to ensure the production issues were corrected. In addition, TACOM initiated refurbishment efforts to correct the production deficiencies in the modules procured under the FY 1993 contract to ensure that the modules were fully operational. Even though additional funds were expended to refurbish modules procured under the FY 1993 contract, this cost was less than the cost of the proposal from the second contractor.

Appendix A. Scope and Methodology

We performed the audit to examine allegations made to the Defense Hotline on May 6, 2003, and in response to a congressional request made by Senator Pete V. Domenici that the connectors used on the MCS were unreliable, unsafe, and contributed to unnecessary risk for the soldiers causing the Army to take more than 10 years (after the award of the contract) to obtain material release of the four MCS subsystems. We also evaluated allegations that TACOM improperly awarded the FY 2001 contract based on price instead of best value.

We collected, reviewed, and analyzed documents dated from December 1992 through August 2004. Specifically, we evaluated contracts, systems specifications, source selection criteria, first article test plans and results, and other contract documentation relating to both the FY 1993 and FY 2001 contracts. We interviewed TACOM, Defense Contract Management Agency, Army Safety Center, 331st Transportation Company, and Department of Transportation personnel to gain a better understanding of the history, mission, purpose, safety factors, and reliability levels of the MCS. Finally, we interviewed the complainant to obtain clarification of the allegations.

We performed this audit from December 2003 through September 2004 in accordance with generally accepted government auditing standards.

The scope was limited in that we did not review the management control program because the audit scope was limited to the allegations on the award of the FY 2001 contract and the reliability and safety of the connectors, as addressed in the Defense Hotline compliant. In addition, due to time and resource constraints we did not review any allegations relating to the life cycle cost of the MCS. We did not physically observe the MCS maintenance or operation because of constraints on travel funds. Furthermore, we reviewed the contract administration of the FY 2001 contract, as it related to determining whether Lake Shore was meeting the requirements of the contract. Finally, we were limited in our review of the FY 1993 contract because complete contract documentation was not transferred to TACOM when ATCOM transferred the contract administration function.

Use of Computer-Processed Data. We did not use computer-processed data to perform this audit.

Use of Technical Assistance. We obtained assistance from a mechanical engineer of the Mechanical Engineering Branch, Technical Assessment Division, of the Office of the Inspector General. The engineer assisted the auditors in understanding the technical requirements for the materiel and function of the side-to-side connector, as well as, determining whether Lake Shore provided a system that met the specifications and functions outlined in the contract.

Government Accountability Office High-Risk Area. The Government Accountabilty Office has identified several high-risk areas in DoD. This report provides coverage of the DoD Contract Management high-risk area.

Prior Coverage

During the last 5 years, the Inspector General of the Department of Defense and the Army Audit Agency have issued four reports discussing the Government acceptance procedures for contractor's parts, review of the Army watercraft program, review of the Army process for reporting quality deficiencies, and review of the Army materiel release process. Unrestricted IG DoD reports can be accessed at http://www.dodig.osd.mil/audit/reports.

IG DoD

IG DoD Report No. D-2003-065, "Allegations Concerning Government Acceptance Procedures for a Contractor's Parts," March 21, 2003

Army

Army Audit Agency Report No. A-2004-0111-AMA, "Army Watercraft Program," January 22, 2004

Army Audit Agency Report No. A-2003-0333-AMA, "Army Quality Deficiency Reporting System," June 30, 2003

Army Audit Agency Report No. AA 99-411, "Materiel Release," September 30, 1999

Appendix B. Components of the Modular Causeway System

The MCS was a collection of interoperable and interchangeable components that was the primary means of the Army to augment existing port facilities, or conduct logistics over-the-shore operations where no port was available due to shallow water or low-sloping beaches. The MCS consisted of four subsystems composed of modules in various combinations. The four subsystems were:

- roll-on/roll-off discharge facility, acted as a pier to move cargo to a barge, while floating next to cargo vessel;
- floating causeway acted as the floating bridge for movement of cargo from a barge to the beach;
- warping tug was used to assemble, push, pull, restrain, and maneuver the roll-on/roll-off discharge facility; and
- causeway ferry was a moving barge that can move cargo from a cargo vessel or roll-on/roll-off discharge facility and floating causeway.

See Figures 1 through 4 for pictures of each of the MCS subsystems.

Figure 1. Roll-On/Roll-Off Discharge Facility

Figure 2. Causeway Ferry

Figure 3. Floating Causeway

Figure 4. Warping Tug

The individual modules that made up the four subsystems were connected together by both side-to-side connectors and end-to-end connectors. The side-to-side connector was composed of both male and female parts that interlock together when the connectors are engaged. The male and female parts were interlocked with a guillotine bar, a vertical bar that came down on the engaged male and female connectors to achieve full connection of the modules. This arrangement strengthened the connectors, enabling them to withstand heavy loads.

See Figure 5 and Figure 6 to see a picture of connector and the components of the connector.

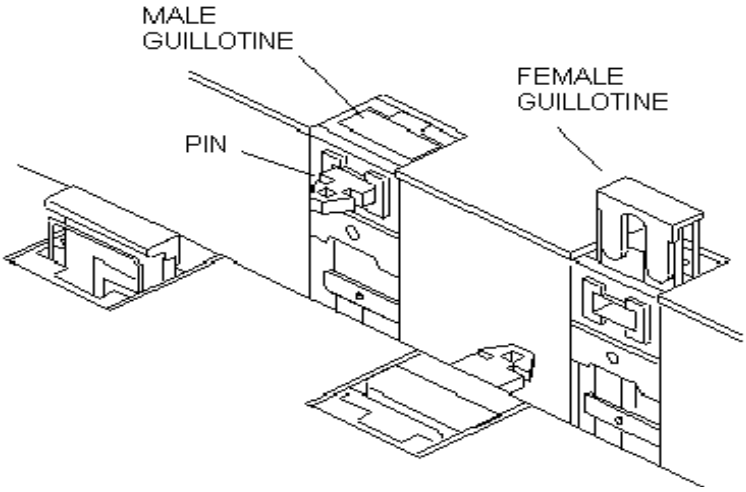

Figure 5. Side-to-Side Connector Assembly

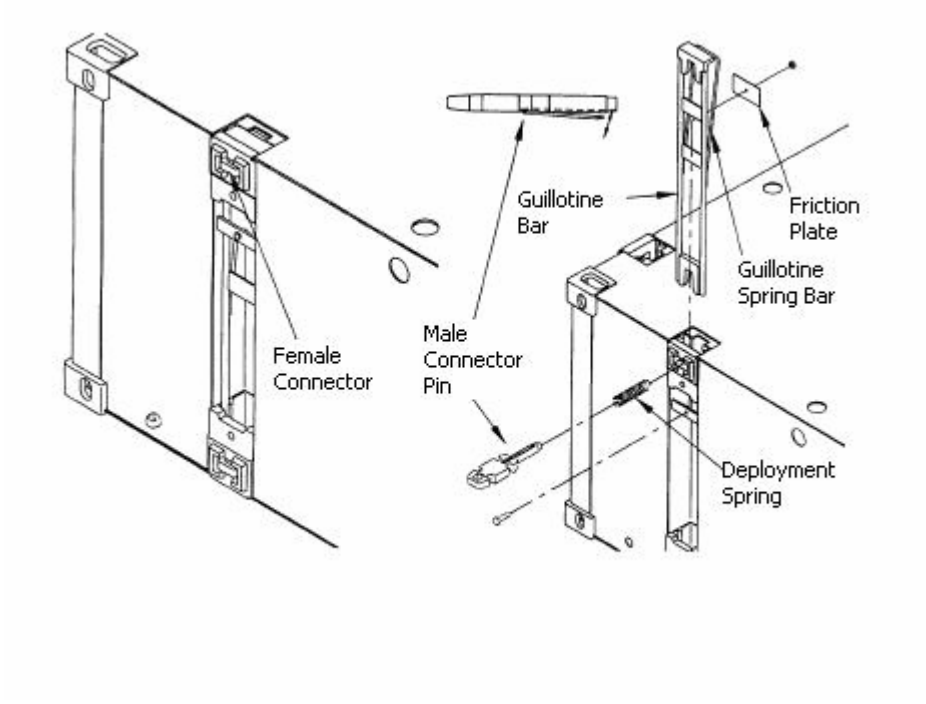

Figure 6. Components of the Side-to-Side Connector System

Source: U.S. Army Tank-automotive and Armament Command

Appendix C. Report Distribution

Office of the Secretary of Defense

Under Secretary of Defense (Comptroller)/Chief Financial Officer
    Deputy Chief Financial Officer
    Deputy Comptroller (Program/Budget)

Department of the Army

Auditor General, Department of the Army
Commander, U.S. Army Tank-automotive and Armaments Command
Commander, U.S. Army Forces Command
    Commander, 7th Transportation Group
        Commander, 331st Transportation Company

Department of the Navy

Naval Inspector General
Auditor General, Department of the Navy

Department of the Air Force

Auditor General, Department of the Air Force

Combatant Command

Inspector General, U.S. Joint Forces Command

Other Defense Organizations

Director, Defense Contract Management Agency

Non-Defense Federal Organization

Office of Management and Budget

Congressional Committees and Subcommittees, Chairman and Ranking Minority Member

Senate Committee on Appropriations
Senate Subcommittee on Defense, Committee on Appropriations
Senate Committee on Armed Services
Senate Committee on Governmental Affairs
House Committee on Appropriations
House Subcommittee on Defense, Committee on Appropriations
House Committee on Armed Services
House Committee on Government Reform
House Subcommittee on Government Efficiency and Financial Management, Committee on Government Reform
House Subcommittee on National Security, Emerging Threats, and International Relations, Committee on Government Reform
House Subcommittee on Technology, Information Policy, Intergovernmental Relations, and the Census, Committee on Government Reform

Team Members

The Office of the Deputy Inspector General for Auditing of the Department of Defense, Contract Management prepared this report. Personnel of the Office of the Inspector General of the Department of Defense who contributed to the report are listed below.

David K. Steensma
Kimberley A. Caprio
Rhonda L. Ragsdale
Linh Truong
Cecil B. Tucker
Tabitha J. Lemley
Theresa Tameris
Chandra Sankhla