Audit Report

OFFICE OF THE INSPECTOR GENERAL

INTERNAL CONTROLS FOR THE MILITARY SEALIFT COMMAND PORTION OF THE TRANSPORTATION BUSINESS AREA OF THE FY 1994 DEFENSE BUSINESS OPERATIONS FUND FINANCIAL STATEMENTS

Report No. 95-259 June 28, 1995

Department of Defense

Additional Copies

Copies of the report can be obtained from the Secondary Reports Distribution Unit, Audit Planning and Technical Support Directorate, at (703) 604-8937 (DSN 664-8937) or FAX (703) 604-8932.

Suggestions for Future Audits

To suggest ideas for or to request future audits, contact the Planning and Coordination Branch, Audit Planning and Technical Support Directorate, at (703) 604-8939 (DSN 664-8939) or FAX (703) 604-8932. Ideas and requests can also be mailed to:

Inspector General, Department of Defense
OAIG-AUD (ATTN: APTS Audit Suggestions)
400 Army Navy Drive (Room 801)
Arlington, Virginia 22202-2884

DoD Hotline

To report fraud, waste, or abuse, call the DoD Hotline at (800) 424-9098; by sending an electronic message to Hotline@DODIG.OSD.MIL; or by writing the Defense Hotline, The Pentagon, Washington, D.C. 20301-1900. The identity of writers and callers is fully protected.

Acronyms

ADP	Automatic Data Processing
ADPSSO	Automated Data Processing Systems Security Officer
CARS	Cargo Accrual System
CFO	Chief Financial Officers
DBOF	Defense Business Operations Fund
DFAS	Defense Finance and Accounting Service
FINIS	Financial Information System
FMIS	Financial Management Information System
MSC	Military Sealift Command
MTMC	Military Traffic Management Command
ULB	Unit Level Billing System
USTRANSCOM	United States Transportation Command
VIPS	Vessel Information Planning and Analysis System

June 28, 1995

MEMORANDUM FOR UNDER SECRETARY OF DEFENSE (COMPTROLLER)
COMMANDER IN CHIEF, U.S. TRANSPORTATION COMMAND
ASSISTANT SECRETARY OF THE NAVY (FINANCIAL MANAGEMENT AND COMPTROLLER)
DIRECTOR, DEFENSE FINANCE AND ACCOUNTING SERVICE

SUBJECT: Audit Report on Internal Controls for the Military Sealift Command Portion of the Transportation Business Area of the FY 1994 Defense Business Operations Fund Financial Statements (Report No. 95-259)

We are providing this report for review and comments. The audit was conducted in response to the Chief Financial Officers Act of 1990. Management comments on a draft of this report were considered in preparing the final report.

DoD Directive 7650.3 requires that all audit recommendations be resolved promptly. The comments we received from the Military Sealift Command were not fully responsive. Therefore, we request that the Military Sealift Command provide additional comments on Recommendations A.1., A.5., A.6., A.7., A.8., B.5., B.6., and B.7. by August 28, 1995. Recommendations are subject to resolution in accordance with DoD Directive 7650.3 in the event of nonconcurrence or failure to comment.

The courtesies extended to the audit staff are appreciated. Questions on this audit should be directed to Mr. Raymond D. Kidd, Audit Program Director, at (703) 604-9110 (DSN 664-9110), or Ms. Barbara A. Sauls, Audit Project Manager, at (703) 604-9129 (DSN 664-9129). See Appendix G for the report distribution. The audit team members are listed inside the back cover.

Robert J. Lieberman
Assistant Inspector General
for Auditing

Office of the Inspector General, DoD

Report No. 95-259 **June 28, 1995**
(Project No. 4FH-2011)

Internal Controls for the Military Sealift Command Portion of the Transportation Business Area of the FY 1994 Defense Business Operations Fund Financial Statements

Executive Summary

Introduction. The United States Transportation Command integrates global air, land, and sea transportation operations, which are financed through the Defense Business Operations Fund. In FY 1994, the United States Transportation Command reported revenues of $5.8 billion, operating expenses of $5.7 billion, and a positive net operating result of $152.2 million. In FY 1994, the United States Transportation Command and its three components, the Military Traffic Management Command, the Military Sealift Command, and the Air Mobility Command, reported assets valued at $3.2 billion and had an authorized total of about 76,000 military and civilian personnel. The Military Sealift Command provides sea transportation of equipment, supplies, and ammunition to sustain United States forces worldwide. During FY 1994, its reported assets were valued at $2.2 billion.

Audit Objectives. The primary audit objective was to determine whether the FY 1994 Statement of Financial Position was presented fairly in accordance with Office of Management and Budget Bulletin No. 94-01, "Form and Content of Agency Financial Statements," November 16, 1993. The objective was revised to determine whether internal controls at the Military Sealift Command ensured accurate account balances on the Military Sealift Command's FY 1994 Statement of Financial Position. In addition, we reviewed the management control program at the Military Sealift Command. The Air Force Audit Agency, in a separate project, determined whether the internal controls at the Air Mobility Command ensured accurate account balances on its FY 1994 Statement of Financial Position. The financial data for the Military Traffic Management Command were not material to the United States Transportation Command's financial statements, and therefore were not audited.

Audit Results. Internal controls at the Military Sealift Command were not adequate to establish the transaction trail from the account balances to underlying transactions supporting the Military Sealift Command's FY 1994 Statement of Financial Position. In addition, general controls associated with access and accountability over the Unit Level Billing System's application programs and data were ineffective. We consider these weaknesses material. However, the Military Sealift Command implemented system and computer security changes that should improve internal controls. See Appendix A for a discussion of our review of the management control program.

o The accounting and related systems at the Military Sealift Command did not fully comply with accounting principles, standards, and policies; did not use the DoD Standard General Ledger chart of accounts; did not maximize the use of standard data processing; did not make the most efficient use of data processing and accounting methodology; and did not produce auditable financial statements. The control environment at the Military Sealift Command lessened the effectiveness of existing policies and procedures. The Military Sealift Command did not have the control procedures needed to assure management that material errors were detected promptly. As a result, we could not establish a transaction trail from the Accounts Receivable account balance of $301.4 million and the Accrued Expenses account balance of

$598.2 million, as shown on the Military Sealift Command's FY 1994 Statement of Financial Position, to the transactions supporting the account balances. However, the Military Sealift Command made system changes that should improve the financial reporting process (Finding A).

o The Military Sealift Command did not have effective general controls for access and accountability over the Unit Level Billing System's application programs and data. As a result, at least 31 users had the ability to alter programs and data in the Unit Level Billing System without detection, and at least 7 user identification codes of unauthorized personnel were in use. The Military Sealift Command took prompt action to correct the problems with user identification codes (Finding B).

Strengthening internal controls over the accounting and related systems and computer security will improve financial reporting and reduce the vulnerability of programs and data to unauthorized access (Appendix E).

Summary of Recommendations. We recommend that the Commander, Military Sealift Command, comply with DoD and Navy regulations on internal controls and computer security, review new systems to see whether improvements have been made, validate the data produced by the systems, and train the personnel working on them. In addition, the Military Sealift Command should develop standard operating procedures for the Accounting Division, tighten computer security, and provide more comprehensive security training and supervision to security officers.

Management Comments and Audit Response. The Military Sealift Command generally concurred with the recommendations; however, we did not consider the comments fully responsive. The Military Sealift Command agreed to comply with DoD and Navy regulations on the internal controls related to financial data, but did not clearly state what measures would be implemented. We request additional comments on how the Military Sealift Command intends to improve the crosswalk to the DoD Standard General Ledger, validate data used to accrue expenses, establish standard operating procedures for the Accounting Division, and determine the training needs of operations and security personnel. Although the Military Sealift Command concurred with the recommendations to improve computer security, we did not consider the planned actions to be responsive. We request that the Military Sealift Command reconsider the completion dates required to implement the recommendations. See Part I for a complete discussion of management's comments, and Part III for the text of the comments. We request that the Military Sealift Command provide additional comments by August 28, 1995.

Table of Contents

Executive Summary i

Part I - Audit Results

Audit Background 2
Audit Objectives 2
Finding A. Internal Control Structure 4
Finding B. Military Sealift Command Computer Security 22

Part II - Additional Information

Appendix A. Scope and Methodology
Scope and Methodology 32
Management Control Program 34
Appendix B. Prior Audits and Other Reviews 36
Appendix C. Other Matters of Interest 38
Appendix D. Selected Military Sealift Command Accounting and Related Systems 39
Appendix E. Summary of Potential Benefits Resulting From Audit 40
Appendix F. Organizations Visited or Contacted 41
Appendix G. Report Distribution 43

Part III - Management Comments

Military Sealift Command Comments 46

Part I - Audit Results

Audit Background

On October 1, 1992, the Under Secretary of Defense (Comptroller) (then the Comptroller of the Department of Defense) incorporated the United States Transportation Command (USTRANSCOM) into the Defense Business Operations Fund (DBOF), a revolving fund. The Secretary of Defense had established USTRANSCOM in April 1987 as a unified command to integrate global air, land, and sea transportation during wartime. In 1992, USTRANSCOM's role expanded to include a peacetime mission. Headquartered at Scott Air Force Base, Illinois, USTRANSCOM executes its mission through three transportation components: the Military Traffic Management Command (MTMC), Falls Church, Virginia; the Military Sealift Command (MSC), Washington, D. C.; and the Air Mobility Command, Scott Air Force Base, Illinois.

In FY 1994, USTRANSCOM reported revenues of $5.8 billion, operating expenses of $5.7 billion, and a positive net operating result of $152.2 million. USTRANSCOM and its components reported assets valued at $3.2 billion, and have an authorized total of about 76,000 military and civilian personnel. USTRANSCOM, as manager of the DBOF Transportation Business Area, provides management oversight of its components' budgets, mission operations, and financial systems. USTRANSCOM participates in all accounting and financial issues concerning its components.

The Military Sealift Command provides sea transportation of equipment, supplies, and ammunition to sustain United States forces worldwide. During FY 1994, its reported assets were valued at $2.2 billion.

The Defense Finance and Accounting Service (DFAS) and its various Defense Accounting Offices perform accounting functions for USTRANSCOM and its components. DFAS Denver Center is the consolidating office for USTRANSCOM and prepares the financial statements required by the CFO Act. This audit was conducted in response to the CFO Act.

Audit Objectives

Our primary objective was to determine whether the FY 1994 Statement of Financial Position was presented fairly in accordance with Office of Management and Budget Bulletin No. 94-01, "Form and Content of Agency Financial Statements," November 16, 1993.

During the audit, the DoD Chief Financial Officer and audit communities decided to emulate successful private sector business practices and move to a corporate audit approach for DBOF. As a result, an audit opinion will be expressed on DBOF as a whole, but not on the financial statements of USTRANSCOM or other subentities. The USTRANSCOM FY 1993 Statement of Financial Position was our basis for the preliminary estimate of materiality.

The four material accounts selected for review were Accounts Receivable; Property, Plant, and Equipment; Accounts Payable; and Other Non-Federal Liabilities. The review showed that MSC and the Air Mobility Command made up $2.7 billion out of $3.1 billion reported on the USTRANSCOM FY 1993 financial statements for the four selected accounts. As a result, we revised our audit approach to concentrate on the MSC component of USTRANSCOM. The audit concentrated on internal controls as related to the financial and accounting systems and the preparation of the financial statements; therefore, we did not perform substantive testing of the transactions supporting the selected accounts. We did not recommend adjustments to the account balances or quantify the dollar effect of identified internal control problems.

See Appendix A for a discussion of the audit scope, methodology, and coverage of the management control program. Appendix B discusses prior audit coverage of the financial aspects of military transportation.

Finding A. Internal Control Structure

The internal control structure at MSC did not provide reasonable assurance of achieving the internal control objectives in DoD Directive 5010.38, "Internal Management Control Program," April 14, 1987, and DoD Regulation 7000.14-R, "DoD Financial Management," Volume 1, "General Financial Management Information, Systems, and Requirements," May 1993. Consequently, the control risks were high because of material weaknesses in the accounting and related systems producing the financial statements; an inadequate control environment, including management's lack of emphasis on training; and ineffective control procedures needed to assure management that material errors were detected promptly. As a result, we could not establish a transaction trail from the Accounts Receivable account balance of $301.4 million and the Accrued Expenses account balance of $598.2 million, as shown on the MSC FY 1994 Statement of Financial Position, to the transactions supporting the account balances.

Internal Control Responsibilities

DoD Directive 5010.38 states the objectives of internal controls. One important objective of internal controls is to provide reasonable assurance that revenues and expenditures applicable to agency operations are recorded and accounted for properly, so that accounts and reliable financial and statistical reports may be prepared and accountability for assets may be maintained. Management is responsible for establishing and maintaining an effective internal control structure. To fulfill this responsibility, management estimates and judges the expected benefits and related costs of internal control structure policies and procedures. The internal control structure for management's accounting or financial information comprises the accounting and related systems, control environment, and control procedures.

Accounting and Related Systems

MSC could not provide reasonable assurance that the FY 1994 financial statements properly reflected its operations. Assurance was lacking because the accounting and related systems did not fully comply with DoD Regulation 7000.14-R. Manual and automated systems did not:

- fully comply with accounting principles, standards, and policies;
- use the DoD Standard General Ledger chart of accounts;

o maximize the use of standard data processing;

o make the most efficient use of data processing and accounting methodology; or

o produce auditable financial statements.

As a result, management could not establish a transaction trail from the account balances for Accounts Receivable and Accrued Expenses to underlying transactions supporting the MSC FY 1994 Statement of Financial Position.

DoD-Wide Financial Management System. In addition to establishing the requirements for the DoD accounting systems, DoD Regulation 7000.14-R made the CFO, DoD, responsible for developing and implementing DoD-wide financial management systems. Because of the magnitude of that effort, the CFO, DoD, made Headquarters, DFAS, responsible for identifying and nominating migratory accounting and financial systems until DoD-wide systems could be developed. A DoD-wide system should support the DBOF concept of providing information on a real-time basis. To satisfy the requirement for an accounting system and other needs of the DBOF concept, the Secretary of Defense established the DBOF Corporate Board and made the Board responsible for developing policies and procedures and recommending actions to support DBOF financial management systems.

To develop interim systems, DFAS Headquarters reviewed and evaluated four financial management systems for the Transportation Business Area: the Corps of Engineers Financial Management System; the Financial Management Information System (FMIS); the Job Order Cost Accounting System II; and the Standard Industrial Fund System. In September 1994, DFAS submitted a "Report on the Comparative Evaluation of the Candidate Interim Migratory Systems for the Transportation Business Area" to the DBOF Corporate Board. In the report, DFAS nominated FMIS, the accounting system used at MSC, as the interim migratory system. However, no consensus existed among Board members on whether to accept or reject FMIS. As a result, on December 19, 1994, the CFO tasked DFAS Headquarters to perform a functional economic analysis between FMIS and the Corps of Engineers Financial Management System to determine the most appropriate interim migratory system for the Transportation Business Area. The results of the analysis are expected by September 1995. Until the DBOF Corporate Board decides on an interim system, MSC and the other components of USTRANSCOM will continue to use their current systems. MSC has implemented changes to FMIS and related systems; those changes should improve internal controls.

Financial Management Information System. At MSC Headquarters, we reviewed FMIS, an accounting and financial management information system that supports DBOF Transportation and DBOF Navy areas at MSC Headquarters and its Area Commands. FMIS was developed in 1989 and implemented in 1993, and is operated at the Defense Information Processing Center in Washington, D.C. FMIS uses commercial off-the-shelf technology that includes continual upgrades and contract support. Complementary modules

can be integrated as needed. In addition to the General Ledger and Accounts Payable (PAYS) modules already in use, projected modules for FMIS include Accounts Receivable; Funds Tracking; Revenue and Mission Workload; Cost Accounting and Accruals; and Budget Preparation and Execution.

FMIS consists of subsystems that provide data, either directly or indirectly through personal computer interfaces, to the General Ledger. The General Ledger captures all data entries and produces the figures for the financial statements. The Unit Level Billing System (ULB) and the Revenue Lift System produce the actual and accrued revenue and generate the Accounts Receivable balances. The manual Accounts Receivable tracking system updates billing status and collection changes to the Accounts Receivable balance. FMIS Gateway edits and processes computer files from the ULB as well as the manual data from the property, plant, and equipment spreadsheets. The edits and checks take place before the data enter the General Ledger and at the General Ledger.

Until FY 1995, MSC Pacific used the Financial Information System (FINIS) to process and calculate Accrued Cargo Expenses such as Shipping Agreements/Contracts Container. FINIS has been replaced by the Cargo Accrual System (CARS), which also calculates Accrued Cargo Expenses. On the operational side, the Vessel Information Planning and Analysis System (VIPS) at MSC Headquarters is a feeder system that provides data needed to calculate and accrue other Accrued Expenses, which include fuel expense, charter costs, port charges, tolls, and miscellaneous expenses such as ship activation and deactivation. The manual system for processing Accrued Expenses generates and tracks those Accrued Expenses not produced by FINIS or CARS.

Appendix D shows the system interfaces and describes the systems reviewed at MSC Headquarters. The appendix shows the automated relationship among the MSC Area Commands; MTMC and the Navy ports; and the ULB, Revenue Lift, and FMIS Gateway systems.

General Ledger. The FMIS General Ledger did not conform to the DoD Standard General Ledger chart of accounts as required by DoD Regulation 7000.14-R. The FMIS General Ledger was an off-the-shelf module that had not been adapted to meet DoD requirements. MSC uses Service-unique charts of accounts that must be crosswalked to the Standard General Ledger to prepare CFO financial statements and management reports. MSC found it difficult to certify the reliability of the DFAS-prepared financial statements because a one-to-one relationship did not exist between the MSC chart of accounts and the Standard General Ledger chart of accounts. MSC found that transactions were not always properly recorded and accounted for, and the account balances in the financial statements could not be traced back to the General Ledger or the original source documents. To comply with the DoD requirement, the General Ledger must be adapted to use the DoD Standard General Ledger chart of accounts.

Tracking and Reconciling of Accounts Receivable. MSC recognized that the manual tracking and reconciling of Accounts Receivable did not make the most

efficient use of data processing and accounting methodology, and did not fully comply with DoD accounting principles, standards, and policies. As a result, MSC developed an interim Accounts Receivable system that should improve the process. Processing at least 300 transactions per month manually rather than automatically did not allow for prompt tracking of Accounts Receivable. The delay in tracking Accounts Receivable prevented accurate and timely reporting of information needed to age the accounts. MSC expects to alleviate the problem through an automated tracking system. MSC did not comply with DoD requirements to establish an Allowance for Loss on Accounts Receivable and to age Accounts Receivable based on actual data. The lack of an allowance for uncollectibles prevented full disclosure of the financial situation. MSC aged Accounts Receivable based on estimated data. These shortcomings led to unreliable financial information.

Unit Level Billing System. The ULB is the MSC billing system for dry cargo; it electronically collects transportation data from the Area Commands and MTMC. The ULB calculates the revenue amount for MSC and the cargo billing amount for the sponsor. As shown in Appendix D, the ULB and the Revenue Lift System transfer revenue data through personal computers to FMIS Gateway. Within FMIS Gateway, coding takes place to credit the Revenue account and debit the Accounts Receivable account for the revenue amount in the General Ledger. During a limited review, we did not identify material errors in the Accounts Receivable process. Problems in timeliness and efficiency occurred with tracking receivables from unbilled to billed to collected.

Use of Manual Data Processing. The manual tracking of an average of 300 Accounts Receivable transactions each month was inefficient. MSC personnel tracked the data on personal computer spreadsheets because no automated system had been developed. The 300 transactions consisted of approximately 100 entries of unbilled, 100 entries of billed, and 100 entries of collections. As a result, critical reporting information, to include the aging of Accounts Receivable, was not promptly available.

The tracking of Accounts Receivable involved reconciling cash collections to billed receivables. The accountants posted data to 100 different active FMIS sponsor codes, tracked status changes from unbilled to billed to collected, and entered collection data into FMIS Gateway. If discrepancies existed, reconciliation normally took about 2 weeks each month. MSC Headquarters is automating the tracking process with Access, an interim Accounts Receivable system. Through Access, unbilled Accounts Receivable will be automatically matched to billed Accounts Receivable. Data will be entered only once to keep control of Accounts Receivable figures.

Compliance with Accounting Principles, Standards, and Policies. DoD Manual 7220.9-M, "DoD Accounting Manual," October 1983, as replaced by DoD Regulation 7000.14-R, "Accounting Policy and Procedures," Volume 4, January 1995, requires all agencies to establish an allowance for uncollectibles. MSC had not established an Allowance for Uncollectibles account, although the account existed in the Navy chart of accounts. MSC personnel did not consider the account a requirement because the Navy

Comptroller Manual, "Navy and Marine Corps Industrial Funds," Volume 5, May 1991, did not mention it. According to personnel in the Navy Comptroller's Office, DFAS was responsible for updating Volume 5 to show the requirement. Because it had not been updated, accounting personnel were not aware of the requirement. In addition, MSC was not informed of changes in DoD regulations because of weaknesses in the dissemination of DFAS guidance. For further discussion, see Appendix C, "Other Matters of Interest."

In August and September 1994, the DFAS Denver Center reviewed MSC Accounts Receivable over 120 days old and determined that MSC had $1.8 million of uncollectible receivables before DBOF was established. DFAS Denver Center advised MSC to adjust the uncollectibles against Assets Capitalized. MSC did not accomplish the $1.8 million write-off during 1994; therefore, the Accounts Receivable footnotes to the USTRANSCOM 1994 Statement of Financial Position stated that MSC would write off $1.8 million in FY 1995. The $1.8 million write-off had not been shown as uncollectible. MSC should use the Allowance for Loss on Accounts Receivable and should determine the account balance as required by DoD Regulation 7000.14-R. The use of historical data is one method of estimating the balance for the Allowance for Loss on Accounts Receivable.

Agencies should age delinquent Accounts Receivable to show amounts owed to the Government, and should report the information to the Department of the Treasury. The DFAS Denver Center is responsible for reporting the USTRANSCOM information to DFAS Headquarters, which in turn reports to the Department of the Treasury. According to MSC, the DFAS Denver Center did not ask for the MSC aging information needed to consolidate and report the USTRANSCOM information. As a result, the DFAS Denver Center applied aging percentages used by the Air Mobility Command to the MSC Accounts Receivable balance. In addition, the time-consuming process of tracking Accounts Receivable prevented MSC from providing actual values at the month's end. The aging data sent to USTRANSCOM were estimated and could not be substantiated.

As of September 1994, the Accounts Receivable-Federal Entities balance on the MSC financial statement was $301.4 million, with $4 million in Accounts Receivable over 120 days. As stated in the regulation, the more delinquent an account, the more likely that it will not be collected. With the Access system, the aging of Accounts Receivable can be based on actual rather than estimated data. MSC should develop procedures to age Accounts Receivable promptly and report the information to DFAS Denver Center in a timely manner.

FINIS Calculation of Accrued Cargo Expenses. During FY 1994, the calculation of Accrued Cargo Expenses at MSC did not fully comply with accounting principles, standards, and policies; maximize the use of standard data processing; or make the most efficient use of data processing and accounting methodology. FINIS was unable to process critical data, such as measurement tons and rates, needed to calculate Accrued Expenses. For example, more detailed rate information could not be added without rewriting the entire program. In addition, MSC personnel had to manually process approximately 5,000 line items each month to generate a history report of

transactions. As a result, the account entries for Accrued Expenses, such as Shipping Agreements/Contracts Container, Breakbulk, and Government Bill of Lading, could not be substantiated. Through CARS, MSC made a significant system change that should improve the calculation of Accrued Cargo Expenses.

FINIS and CARS. FINIS was an MSC Pacific automated data processing system that processed ULB records at MSC Pacific and computed and accrued cargo expenses. FINIS was not properly designed to handle the accruals from MSC Pacific. Without warning or explanation, FINIS would periodically shut down and lose data. The largely manual process of correcting FINIS errors was further slowed when the system failed.

CARS has replaced FINIS in the Pacific Area Command. CARS was designed to automate the manual processes not handled by FINIS, which are the posting of shipments, bills, and expense data, and calculating and transmitting accruals and revenue lift estimates. CARS is expected to increase the efficiency, timeliness, and accuracy of the cargo accrual process. However, management must ensure that CARS corrects the deficiencies in FINIS. Although CARS has replaced FINIS, the problems identified with FINIS affected our ability to establish a transaction trail from the FINIS-generated Accrued Expenses account balance of $56.6 million, as shown on the MSC FY 1994 Statement of Financial Position, to the transactions supporting the account balances.

Compliance with Accounting Principles, Standards, and Policies. Periodically and without warning, FINIS would shut down and lose data on cargo expense accruals. MSC personnel involved in reconciling cargo expense accruals could not explain why the system shut down. When data were lost, users had to manually reconcile and input the data, thus increasing the workload for four employees at MSC Pacific. In addition, FINIS created cargo expense accruals for mileage, storage charges, and port charges by estimating those charges based on percentages.

Another FINIS deficiency affected accruals of cargo revenue. Revenue and expense data were calculated using different rates. Cargo revenue data were captured in the ULB and the Revenue Lift systems when transportation data were initially input at the rate effective on the sailing date; however, when the cargo expense data were captured in FINIS, the rate applicable on the input date was used. This inconsistency in rates occurred when the previous year's transportation data were received and input in years other than the year of sailing. As a result, income and expenses could not be matched. MSC Pacific personnel used the "Commercial Container Cost Comparison Income and Expense Report" to correct the mismatched revenues and expenses in the following month. Those deficiencies prompted MSC to develop and implement CARS.

Effective Use of Data Processing and Accounting Methodology. When FINIS accrued cargo expenses, MSC employees manually tracked, reconciled, and reestablished accruals affected by payments from Accounts Payable. Payments against accruals were manually entered in FINIS and documented in a transaction register. To ensure accurate payment information,

MSC employees manually corrected and updated the transaction register. When the transaction register was corrected, FINIS processed the payment data against the accruals.

If a payment was made against an accrual, FINIS generated the Accrual Match Report containing the reversal of the accrual, the payments made, and the reaccrual of any unpaid amount. At MSC Pacific, 4 employees manually reconciled approximately 5,000 line items per month of shipment, billing, and payment data. MSC Pacific personnel used source documents and control sheets to manually calculate and post incorrect or missing accruals generated by FINIS. FINIS also generated monthly expense reports, which MSC Pacific personnel manually reviewed and corrected. These manual processes, despite the efforts of MSC employees, were susceptible to errors because large amounts of data had to be reviewed and processed.

VIPS Input to Accrued Expenses. The data produced by the feeder system, VIPS, did not fully comply with accounting principles, standards, and policies, and the manipulation of the data did not make the most efficient use of data processing. VIPS user personnel at the Area Commands did not validate the data entered into the system, and the internal controls at MSC Headquarters did not recognize errors in all instances of data entry. In addition, the accountants' manual process of accruing expenses from VIPS operational and other financial data was time-consuming. As a result, the data extracted from VIPS and used to calculate Accrued Expenses were not reliable, which affected the accuracy of Accrued Expenses reported on the MSC financial statements. User personnel at the Area Commands should validate VIPS data to ensure accuracy.

VIPS. Implemented in 1986, VIPS was designed to give information on the voyages of MSC-sponsored dry cargo ships. VIPS provides tracking data, including ship itinerary, actual voyages completed, and the number of hours, days, and minutes that a dry cargo ship was in port or at sea during a given month. VIPS is a feeder system; its mission is to provide data for operational purposes, not for accounting. However, data produced by VIPS are used to calculate monthly accruals, such as Fuel Expense, Charter Costs, Port Charges, Tolls, and Miscellaneous Expenses such as Ship Activation and Deactivation. Area Command personnel were not consistent in entering Military Sealift Command data in VIPS, and did not validate their data inputs. As a result, the data extracted from VIPS and used to calculate Accrued Expenses were not reliable.

Responsibility for VIPS Data. MSC Instruction 4610.32D, "Vessel Information Planning and Analysis System (VIPS) Reporting Instructions," September 6, 1990, assigns responsibility to MSC Area Commanders for VIPS operations, maintenance, reporting, and training for their geographical areas.

VIPS Users. The VIPS users at ports in each Area Command are responsible for tracking and reporting on dry cargo ships that are sailing in their geographical areas. Data on scheduled ship voyages are communicated by message from each ship to the Area Commands and copied to MSC Headquarters on automated messages. Messages and other data on the voyages

of dry cargo ships are used as source data and input into VIPS by the VIPS users. In addition, the VIPS users at each Area Command are responsible for validating VIPS data and correcting errors.

VIPS Administrators. The VIPS Administrator at MSC Headquarters maintains the overall operations of VIPS, makes changes and improvements to VIPS applications, resolves data entry problems, and assists in VIPS user training. The VIPS Administrator reviews a daily "VIPS Arrival/Departure and Fuel Report" (Arrival and Departure Report) that details approximately 11,440 transactions of voyage data on previously used and currently operated dry cargo ships. The VIPS Administrator reviews the Arrival and Departure Report to identify data errors or the need for updates. Frequently, the VIPS Administrator requests updates on ship voyages from the VIPS users at the Area Commands.

At the month's end, the VIPS Administrator reviews the "VIPS Port Time Report" (Port Time Report) that summarizes voyages of individual ships by days, hours, and minutes the ship was at sea or in port. The Port Time Report is used as source data to prepare a monthly "Port/Sea Time and Fuel Consumption Report" (Port and Sea Time Report). The VIPS Administrator prepares the Port and Sea Time Report and submits it to the MSC Headquarters Accounting Division. The Port and Sea Time Report provides the source data used by MSC accountants in preparing Accrued Expense entries for dry cargo ships.

Compliance with Accounting Principles, Standards, and Policies. The VIPS data used to accrue expenses could not be relied on for accuracy because the VIPS users at MSC Area Commands did not validate the data or always update VIPS as required. In addition, the internal controls at MSC Headquarters did not provide for recognition of all errors in data entry. Users at the Area Commands made data entry errors and failed to update VIPS. Internal controls at MSC Headquarters provided for detection only of obvious instances of noncompliance, such as a lack of port or sea days for a ship voyage. DoD Regulation 7000.14-R requires that accurate financial data be furnished to management. For example, the MSC Comptroller regularly briefs the Commander, MSC, about the financial status of MSC. In addition, budget execution requires tracking of budgeted expenses to actual expenses on a line-item basis. Accrued Expenses and actual cash payments compose the expenses reported on the MSC monthly profit and loss statement. Accrued Expenses are used to determine monthly balances for the accrued liability account, the expense account, and the net operating results. Therefore, the consequences of inaccurate Accrued Expenses extend beyond the financial statements and could influence financial, operational, and budget decisions.

VIPS Reports. Our judgmental sample of fuel accrual transactions for February and July 1994 indicated that in three out of five transactions, the incorrect dollar amount was accrued. In one instance, the Arrival and Departure Report indicated that a ship was in port for 23 or 24 days during a given month. However, when the data base was summarized in the Port Time Report, no port days were reported. Lack of reported port days understates the accrual for Port Charges and overstates the accrual for Fuel

Charges. In addition, in a Port and Sea Time Report used by MSC accountants, the number of days that the ship was in port or at sea was blank. In each of the sampled transactions, the original number of port days could not be determined from the Arrival and Departure Report. In another sample, the ship was listed as being at sea between 15 and 21 days during the month. Fuel was eventually accrued for 26 days at sea.

Updates to VIPS. VIPS users at MSC Area Commands did not update VIPS. As a result, VIPS data needed at month's end to prepare the Port and Sea Time Report were incomplete. Although MSC Instruction 4610.32D requires MSC Area Commanders to report VIPS information daily, the actual data input were inconsistent. These inconsistencies were attributed to other Area Command priorities, the nonavailability and inability of the VIPS users at the Area Commands to perform this function, and the lack of training on VIPS. Automated messages and other source data were used by the VIPS Administrator to determine whether ship voyage data in VIPS were current and accurate. The number of automated messages available for daily review ranged from fewer than five messages to several hundred. This volume prevented the VIPS Administrator from reviewing 100 percent of automated messages on dry cargo ships. In addition, edit checks or reconciliations were not possible because of strict reporting deadlines at the month's end. The VIPS Administrator was required to give a Port and Sea Time Report to the MSC Accounting Division by the 6th working day following the month's end. To compensate for incomplete VIPS data, personal judgment was used to interpret the monthly Port Time Report, and estimates were made. The ship's actual movements should be checked and reconciled with data from ship schedules, automated messages, and other reports to ensure that the VIPS data are accurate.

Efficient Use of Data Processing and Accounting Methodology. Accountants must use the monthly Port and Sea Time Report, a report of VIPS summary data and estimated fuel use, to update the accrual data and calculate the total costs for the month by individual ships. Actual payment history is used to calculate averages used for accruals. For example, each day a ship is in port may cost $1,000. The Port and Sea Time Report shows the number of days the ship is in port. An MSC database system calculates port charges based on port days entered and enters the accrual data into FMIS Gateway. As noted in the General Ledger, the reversals are automatic; however, reestablishing the accrual for the subsequent period is manual and tedious.

VIPS does not automatically interface with FMIS Gateway or the General Ledger. The port time data are manually transferred from the Port and Sea Time Report into spreadsheets before entry into the General Ledger. At MSC, 6 or 7 employees must enter VIPS data from 20 to 30 ships per month or 60 to 90 transactions. MSC personnel enter the data over a 2-week period each month. Because MSC does not have an integrated system, data must be entered manually, which could reduce data reliability and the accuracy of accruals. For example, VIPS data are often updated after the Port and Sea Time Report is prepared; however, the Port and Sea Time Report sent to the Accounting Division is not updated. Therefore, accrual entries based on inaccurate VIPS data are not corrected by MSC accountants. To improve the accuracy of

Accrued Expenses calculated from VIPS data, MSC must require validation of VIPS data. Operations personnel at the Area Commands should follow existing validation procedures to ensure the accuracy of VIPS data.

Accrual Process for Expenses. The MSC Headquarters method of generating and tracking Accrued Expenses did not meet DoD requirements. The method did not fully comply with accounting principles, standards, and policies; the data processing systems used to generate Accrued Expenses differed among components of MSC; and the data processing and accounting methodologies were inefficient. The expense tracking system now under development should improve the process. According to MSC, the system will automate the matching of disbursements and the generation of accrued liabilities, improve internal controls, and comply with regulations.

Compliance with Accounting Principles, Standards, and Policies. The accounting methodology used to generate Accrued Expenses did not meet the standards for accrual accounting. Accruals should be based on the actual receipt of goods and services. Instead, MSC estimated the accrual expense based on obligation or estimated receipt of goods and services. In Naval Audit Service Report No. 053-H-94, "FY 1993 Consolidating Financial Statements of the Department of the Navy Defense Business Operations Fund," June 29, 1994, the Naval Audit Service recognized that the account balances for accruals were unsupported because of errors, financial system deficiencies, and noncompliance with DoD and Navy regulations. To correct the problem, the Naval Audit Service recommended that the Assistant Secretary of the Navy (Financial Management and Comptroller) direct Navy DBOF activities to establish a means of tracking expenses. Such a practice should generate more reliable data and accrue liabilities that can be substantiated with expense details. MSC plans to implement an expense tracking system; however, the implementation date is uncertain.

The Budget Office and the Accounting Division could not support expense and liability accruals in the Ship Activation and Deactivation General Ledger Account because an expense tracking system did not exist. To determine when a ship was activated or deactivated, the Budget Office provided accrual amounts verbally to the Accounting Division based on estimates from the shipper. Neither the Budget Office nor the Accounting Division could produce documentation based on actual receipt of services to support the accruals. Because of the lack of documentation, the transaction trail needed to substantiate the account balances did not exist. To improve the reliability of the Accrued Expenses data from the MSC Budget Office, MSC must establish procedures that will require substantiation of the Budget Office's information on costs.

Standardization of Data Processing. MSC did not use a standardized method for processing accruals of expenses. Accruals were processed differently at MSC Pacific and MSC Headquarters. Accrued cargo expenses were automatically generated at MSC Pacific; when correct, those expenses were automatically entered into the General Ledger through the interface between the General Ledger and FINIS. However, at MSC Headquarters, data extracted from VIPS, the feeder system, were manually entered into a database, used to calculate accrued expenses, transferred automatically, and processed by

FMIS Gateway. A standardized process would reduce the effort needed, increase timeliness and reliability, and improve accountability and data integrity.

Data Processing and Accounting Methodology. DoD Regulation 7000.14-R states that the accounting system should make the most efficient use of data processing and accounting methodology. MSC Headquarters established manual requirements for the monthly accruals and adjustments of Accrued Expenses.

Review Process. After the close of each accounting period, all accrual entries are automatically reversed. As a result, accountants must review each accrual to determine its current status. For instance, an accountant reviews the disbursement listings, which show that an Accrued Expense was paid, to determine whether the payment was partial or in full. If the payment was partial, the remaining accrual amount must be reentered in the system. If the payment was in full, no adjustments are necessary. However, if no disbursement activity was found, the reversed accrual must be reentered into FMIS Gateway.

The accrual review process is the largest function of the Accounting Division at MSC Headquarters, and requires approximately 2 weeks each month. Approximately 6 out of 13 personnel are involved in this process. Accounting personnel processed 3,667 accrual transactions during February and July 1994. If the 2 months are typical, 22,000 transactions would be reviewed annually.

Conclusion. At MSC, the accounting and related systems did not fully comply with the requirements of DoD Regulation 7000.14-R. The systems did not fully comply with accounting principles, standards, and policies; use the DoD Standard General Ledger chart of accounts; maximize the use of standard data processing; make the most efficient use of data processing and accounting methodology; or produce auditable financial statements. As a result, auditors could not establish a transaction trail from account balances to underlying transactions supporting the MSC Statement of Financial Position for FY 1994.

To accomplish the internal control objectives in DoD Regulation 7000.14-R, MSC should adapt the DoD Standard General Ledger chart of accounts, establish an allowance for uncollectibles, substantiate the aging of Accounts Receivable, and ensure that CARS corrects the deficiencies in accruing cargo expenses. Also, VIPS personnel should validate data extracted from VIPS. Accounting personnel should develop procedures to substantiate the accrual information transferred between the Budget Office and the Accounting Division. MSC expects that CARS and the Accounts Receivable system, Access, will improve internal controls.

The Control Environment

At MSC, the control environment made existing policies and procedures less effective; management had not properly trained VIPS personnel. The result could be increased risk of a material misstatement of the account balances for Accrued Expenses.

Formal training courses for VIPS users do not exist. Neither the VIPS Administrator at MSC Headquarters nor the VIPS users at MSC Area Commands have been formally trained on the functions of VIPS. The VIPS Administrator and the Assistant Administrator received on-the-job training from the developer of the VIPS system; however, the training did not give the individuals a complete understanding of the functions of the VIPS data base. The VIPS users at MSC Area Commands received on-the-job training from predecessors. Such training was not adequate; VIPS users made errors, and the VIPS Administrator frequently requested updates to VIPS data. Our analysis of the daily VIPS arrival and departure data for February and July 1994 showed that 166 out of 436 transactions, or 38.1 percent, contained incomplete voyage data. These instances of incomplete data were included in the month-end Port Time Report. The Port Time Report is used to develop the Port and Sea Time Report, which is transmitted to the MSC Accounting Division for expense accrual purposes.

VIPS data are used in conjunction with other financial data to determine expense accruals for dry cargo ships. The timing and accuracy of data entry are critical to the accrual process. Because of the inadequacy of VIPS data, VIPS Administrators could not distinguish between actual and planned voyages. For planned voyages, departure and arrival times are not entered in VIPS. If departure and arrival times are not shown for an actual voyage and the administrator knows that the ship sailed, the administrator uses personal judgment to determine the number of days a ship was in port or at sea. The accuracy of the number of days at sea or in port is directly related to Accrued Expenses for dry cargo ships. Such arbitrary calculation of VIPS data directly affects the accrual amounts for Fuel Expense, Port Charges, and Miscellaneous Expenses such as Ship Activation and Deactivation. Formal training courses should be developed and provided to the VIPS Administrator at MSC Headquarters and VIPS users at MSC Area Commands.

Control Procedures

MSC did not have effective control procedures to assure management that material errors were detected promptly. Accounting personnel did not document their standard operating procedures and accounting transactions. As a result, management could not establish a transaction trail from account balances to underlying transactions supporting the MSC Statement of Financial Position for FY 1994. MSC should establish standard operating procedures for Accounts Receivable and Accrued Expenses.

Control procedures or techniques are policies and procedures, in addition to the control environment and financial management system, that have been established to provide reasonable assurance that specific internal control objectives will be achieved. Standard operating procedures and accounting transactions should be documented to ensure that material errors are detected promptly.

Documentation of Standard Operating Procedures. At MSC Headquarters, standard operating procedures for Accounts Receivable and Accrued Expenses were nonexistent. For example, the MSC Headquarters Accounting Division had no written standard operating procedures, only a job description for the Accounts Receivable functions of tracking, analyzing, and reconciling. When an accountant retired unexpectedly, MSC had to reconstruct much of the Accounts Receivable process.

Similarly, MSC had no standard operating procedures for developing the VIPS-based Accrued Expenses. Personnel used the VIPS data to extract ship data. Standard operating procedures are needed for processing VIPS data at the Area Commands and MSC Headquarters. Accounting personnel discussed the extracted data with the Budget Office to obtain cost figures. Variances between information from VIPS and the Budget Office are sometimes verified to assure consistency in reporting and analysis.

The lack of standard operating procedures may affect the completeness, valuation, and presentation of Accounts Receivable and Accrued Expenses on the Statement of Financial Position. Standard operating procedures must be established, documented, and distributed.

Documentation of Accounting Transactions. Documentation of transactions or other significant events should be complete and accurate, and should facilitate tracing the transactions or events from initiation until the process is completed. The documentation should be useful to managers in controlling their operations, and to auditors or others involved in analyzing operations.

As discussed in "Accrual Process for Expenses," the Budget Office and the Accounting Division could not support actual expense and liability accruals in the Ship Activation and Deactivation General Ledger Account because an expense tracking system did not exist. The Budget Office told the accountants the accrual amounts based on estimates from the shipper. Neither the Budget Office nor the Accounting Division could produce documentation based on actual receipt of services to support the accruals. This lack of documentation prevented the substantiation of financial data.

Conclusion. Control procedures, which are necessary to ensure that management objectives are achieved and material misstatements in the financial statements are detected, were ineffective. MSC Headquarters did not have adequate standard operating procedures and desk procedures for Accounts Receivable and Accrued Expenses. Standard operating procedures are needed for consistent application of accounting standards and operations. All accounting transactions should be properly documented and substantiated.

Summary

The internal control structure at MSC did not provide reasonable assurance of achieving the internal control objectives. To accomplish the internal control objectives in DoD Regulation 7000.14-R, the accounting and related systems within MSC must:

- o comply with accounting principles, standards, and policies;
- o use the DoD Standard General Ledger chart of accounts;
- o maximize the use of standard data processing;
- o make the most efficient use of data processing and accounting methodology; and
- o produce auditable financial statements.

The Under Secretary of Defense (Comptroller) is aware of the weaknesses found at MSC and in the overall DBOF community. In the May 4, 1995, "Management Representation Letter for the Defense Business Operations Fund Financial Statements for FY 1994," sent to the Assistant Inspector General for Auditing, DoD, the Under Secretary of Defense (Comptroller) reiterated many of the problems identified during this audit. Throughout the DBOF community, systemic and procedural deficiencies exist in DoD accounting and financial management systems. The DoD Comptroller also noted problems with internal controls and compliance. USTRANSCOM is also aware of the weaknesses in its components' accounting systems. In the January 27, 1995, "Management Representation Letter for the Defense Business Operations Fund - Transportation FY 1994 Financial Statements," sent to the Assistant Inspector General for Auditing, DoD, the USTRANSCOM Director of Program Analysis and Financial Management noted the lack of integrated systems and lack of compliance with the DoD Standard General Ledger chart of accounts. The Naval Audit Service identified similar weaknesses in the FMIS accounting system in its audit of the MSC FY 1993 financial statements. FMIS lacked subsidiary ledgers and audit trails and did not use the DoD standard general ledger, and its systems were not integrated.

Since FMIS is one of two systems nominated by the DBOF Corporate Board for consideration as the interim migratory system for the Transportation Business Area, we are not making a recommendation on accounting systems. However, financial data will not be reliable until a standardized accounting system is identified and implemented for the USTRANSCOM components.

MSC has taken steps to improve the Accounts Receivable tracking and expense accrual process. CARS, Access, and the expense tracking system are in varying stages of completion. After implementation, MSC expects improvement in internal controls.

Management must emphasize both environmental and procedural controls. This emphasis must include training of personnel and developing written standard operating procedures. Otherwise, the weaknesses in the internal control structure may continue to hinder management's ability to rely on the financial statements, and auditors will be unable to verify the accuracy of the statements.

Recommendations, Management Comments, and Audit Response

A. We recommend that the Commander, Military Sealift Command:

1. Transition toward using the DoD Standard General Ledger chart of accounts and improve the accuracy of crosswalks being used for reporting in the interim.

Management Comments. MSC partially concurred. MSC agreed that the use of the DoD Standard General Ledger chart of accounts is appropriate and has developed a crosswalk for reporting to the DFAS Denver Center. However, MSC stated that significant resources are required to make the change to the MSC accounting system. MSC suggested that this requirement be placed in abeyance until a decision is made to select the migratory system for transportation.

Audit Response. Management comments were not fully responsive. We agree that waiting until a migratory system has been selected, before expending resources to bring the MSC accounting system into compliance, may be more cost effective. However, we are concerned about the accuracy of the crosswalk used for reporting to the DFAS Denver Center. As the USTRANSCOM Director of Program Analysis and Financial Management noted in the management representation letter, dated January 27, 1995, "Since the crosswalks do not always have a one-for-one relationship to the SGL, transactions are not always properly recorded and accounted for to permit the preparation of reliable financial statements . . . ." Improvements to the crosswalk are needed to minimize the potential for accounting errors. MSC should work with the DFAS Denver Center to alleviate the problems with the crosswalk caused by the lack of a one-for-one relationship. These interim corrections should improve the reliability of the financial statements. We request that MSC provide additional comments on our recommendation, which has been modified to clarify our intent and to accomodate MSC comments.

2. Use the Allowance for Loss on Accounts Receivable account from the DoD chart of accounts and establish the criteria for determining the allowance for FY 1995, as stated in DoD Regulation 7000.14-R, "DoD Financial Management," Volume 1, May 1993.

Management Comments. MSC concurred and stated that the action will be completed before the end of FY 1995.

3. Stop estimating the aging data for Accounts Receivable and establish procedures that use actual data in the aging of Accounts Receivable as required by DoD Regulation 7000.14-R, "DoD Financial Management," Volume 1, May 1993.

Management Comments. MSC concurred and stated that the action is complete. The new system, Access, can provide actual Accounts Receivable data.

4. Implement procedures to analyze and document whether the new Cargo Accrual System effectively corrects the deficiencies in the Financial Information System.

Management Comments. MSC concurred and stated that under the new Cargo Accrual System, revenue and expense workloads must be matched and any unbilled revenues and unpaid expenses will be automatically calculated. In addition, any system problems will be promptly identified and corrected. Management considers the corrective action complete.

5. Follow procedures to validate the Vessel Information Planning and Analysis System's dry cargo data used to establish Accrued Expenses, as stated in Military Sealift Command Instruction 4610.32D, "Vessel Information Planning and Analysis System (VIPS) Reporting Instructions," September 6, 1990.

Management Comments. MSC concurred and stated that the VIPS replacement prototype will provide accrued expenses in accordance with MSC Instruction 4610.32D. The action is expected to be complete in December 1995.

Audit Response. Management comments were responsive, but additional clarification is needed. We commend MSC for identifying problems with the current VIPS and developing a VIPS replacement. However, we are not certain whether MSC is developing a new prototype system or upgrading the current system. In addition, VIPS is an operational system that supplies the data needed by accountants to calculate accrued expenses. The MSC Instruction 4610.32D does not require validation of accrued expenses, but rather validation of the data entered in VIPS. MSC should clarify how the data will be validated in compliance with MSC Instruction 4610.32D. We request that MSC provide additional comments on this prototype system that is expected to be operational by December 1995, and its capacity for validating data.

6. Establish standard operating procedures for substantiating the cost figures used to accrue dry cargo expenses.

Management Comments. MSC concurred and stated that the VIPS replacement system will provide accrued expenses in accordance with MSC Instruction 4610.32D. Action is expected to be complete in December 1995.

Audit Response. Management comments were not fully responsive. MSC did not specify how the new system will substantiate the cost figures used to accrue

dry cargo expenses. The recommendation applied to the cost figures obtained from the Budget Office as well as the data extracted from VIPS. Neither the cost figures obtained from the Budget Office nor the data extracted from VIPS were always substantiated. Standard operating procedures are needed to ensure that the data are substantiated. We request that MSC provide additional comments on how this recommendation will be implemented.

7. Determine the training needs of personnel who work with the Vessel Information Planning and Analysis System and provide training on the system and the related regulations.

Management Comments. MSC concurred and stated that a tutorial will be developed for the VIPS prototype system. The action is expected to be complete in December 1995.

Audit Response. Management comments were not fully responsive. In order to be more specific about actions necessary, we modified the recommendation to clarify that MSC should determine the training needs of personnel who work with VIPS and provide training to them on the system and the related regulations. MSC did not state that it would determine the training needs of the personnel working with VIPS, nor did MSC state that it would train personnel on the related regulations. Current VIPS users may possess the user's manual and several technical guides. However, these aids are not sufficient as training tools. We believe that formal as well as on-the-job training is required. Once the training needs have been identified, whether on the current or new system, the training curriculum needs to be developed and executed. We request that MSC provide additional comments on the training of personnel who use VIPS.

8. Develop departmental standard operating procedures and desk procedures for each section of the Accounting Division and the Vessel Information Planning and Analysis System's operations, and verify that the procedures are accurate, updated, and readily accessible.

Management Comments. MSC concurred. MSC stated that procedures will be developed in conjunction with changes in VIPS and accounting procedures. Reengineering and automation efforts will impact these procedures. The target completion date is the end of FY 1996.

Audit Response. Management comments were not fully responsive. We agree that standard operating procedures for the Accrued Expenses generated by the VIPS replacement prototype should be held in abeyance until the system is on line. However, standard operating procedures for each section of the Accounting Division should be developed in a more timely manner. Standard operating procedures for the new system, Access, should be developed before the end of FY 1996. We request that MSC reconsider its comments on the standard operating procedures for the Accounting Division and the completion date. We also request that MSC provide an explanation of the time frame required to implement this recommendation.

Management Comments Required

The Commander, Military Sealift Command is requested to comment on the items indicated with an X in Table 1.

Table 1. Management Comments Required on Finding A.

Recommendation Number	Concur/ Nonconcur	Proposed Action	Completion Date	Related Issues
1.	X	X	X	
5.	X	X	X	
6.	X	X	X	IC*
7.	X	X	X	IC*
8.	X	X	X	IC*

*IC = Internal Controls

Finding B. Military Sealift Command Computer Security

General controls associated with access and accountability over the ULB application programs and data were not effective. This made application programs and data vulnerable to unauthorized access and alteration. These conditions occurred because computer security personnel did not follow policies and procedures that required proper management of access to the application programs for the ULB and accountability for user identification codes (user IDs). In addition, security personnel were not properly trained and supervised in their responsibilities. As a result, at least 31 users could alter ULB data without detection, and at least 7 user IDs of unauthorized personnel were still in use.

Computer Security Responsibilities

The ULB is the automated manifest-based cargo system used by MSC to process cargo manifests for customer billings. The ULB generates the Revenue and Accounts Receivable account balances. The ULB operates on a mainframe computer owned by the Defense Information Processing Center in Washington, D.C.

General controls are policies and procedures for an organization's overall computer operation. General controls are classified as organization and segregation of duties; systems design, development, and modification; and security. Within the broad scope of general controls, we reviewed computer security related to user access to the ULB. The Defense Information Processing Center is responsible for the physical security of the MSC computer and work area. MSC personnel are responsible for access and accountability of users of the MSC programs and data.

OPNAV [Naval Operations] Instruction 5239.1A, "Department of the Navy Automatic Data Processing Security Program," April 1, 1985, and COMSC [Commander, Military Sealift Command] Instruction 5510.8D, "COMSC Security Manual," May 26, 1992, assign the responsibility for ensuring adequate automatic data processing (ADP) security to the activity's commanding officer and the ADP security staff. The instructions also define the responsibilities of the ADP security officer and the ADP systems security officer (ADPSSO).

The ADP security officer, as the senior member of the ADP security staff, should ensure that an ADPSSO is appointed for each automated information system, project, or application. The ADP security officer should advise and assist, direct the ADPSSO in carrying out ADP security responsibilities, and review the plans and procedures of the ADPSSO for completeness and adherence to policy.

Responsibilities of the ADPSSO include performing system risk assessments and monitoring system activity. The ADPSSO should identify the levels of access and type of data handled by each automated information system, and should assign passwords. In addition, the ADPSSO should review audit trails and outputs to ensure compliance with security directives and procedures, and should maintain a current list of all users having access to each automated information system. The list should include names, codes, and user IDs.

Implementation of Computer Security Policies and Procedures

System security personnel at MSC Headquarters did not follow DoD computer security policies and procedures. The ADPSSO did not review and adjust the level of access needed by and granted to ULB users. The ADPSSO did not properly monitor and remove user IDs when access to the ULB was no longer required or authorized. In addition, MSC system security personnel did not use an available security feature to control access to the programs and data. Consequently, at least 31 users could alter ULB data without detection, and user IDs of unauthorized personnel were still in use. If the ADP security officer and ADPSSO had periodically reviewed security operations for compliance with security procedures, these weaknesses in security could have been corrected. MSC did, however, take prompt action to remedy some of the problems we found.

Level of Access to ULB Data and Programs. At least 31 users at MSC could alter ULB data without detection. The ADPSSO did not follow DoD Directive 5200.28, "Security Requirements for Automated Information Systems," March 21, 1988, which requires the use of the least-privilege principle. Under the least-privilege principle, the system grants access only to the information to which the user is entitled by virtue of security clearance and approved access. The ADPSSO had not reviewed and evaluated the need for user access to the MSC Revenue Production Library (the Library).

We reviewed the list of personnel who had been granted access to the Library, which contains sensitive programs and files from the ULB. According to the ADPSSO for the ULB, only a few employees from the Information Resource Directorate's Business Systems Division (the technical branch responsible for program changes) should have access to the entire Library. Employees from operational branches, such as the Performance and Analysis Branch, should have access to only a few files of the Library. However, we found that all 31 users could alter ULB data without detection. MSC computer security personnel should follow established procedures in DoD Directive 5200.28 that require the ADPSSO to periodically review user IDs for the level of access needed by users.

Accountability for User Identification Codes. The ADPSSO did not follow DoD and MSC guidance on accountability for user IDs. The ADPSSO did not periodically review user IDs to ensure that they were up-to-date. In addition, MSC did not utilize a feature of the existing security software that would

establish an audit trail for detecting user access. Consequently, at least seven user IDs for unauthorized personnel were still in use. Four of the seven user IDs could also alter any ULB data without detection. In addition, we found two user IDs with high numbers of security violations. Security violations represent unsuccessful attempts to enter the system using improper passwords or user IDs. These high numbers of security violations may indicate that MSC employees and contractors circulated the user IDs or passwords around the work area. However, we could not determine who committed the violations or the causes of the violations. MSC should follow established procedures and cancel user IDs immediately upon termination of employment or other appropriate circumstances, and should review computer access lists and update them as necessary. MSC should activate the Computer Associates Access Control Facility Version 2 software that provides an audit trail of user access.

Review of User Identification Codes. We reviewed a partial list of ULB users. The list contained information such as name, level of access, and number of security violations. We noted the following problems with access controls.

o User ID one was assigned to a former contractor's employee. The computer account was still active, although the user left MSC in August or September 1994. Another employee used the computer account, and at the time of our review had committed 262 security violations as of the last access date of December 9, 1994. The user could alter data within the ULB.

o User ID two, assigned to a former MSC employee, was still active. The last access date was February 3, 1995. The user could alter data within the ULB.

o User ID three, assigned to a former MSC employee, was still in the system. The last access date was December 1, 1993. The user could alter data within the ULB.

o User ID four, assigned to a former employee of a contractor, was still in the system. The last access date was October 3, 1994. The user could alter data within the ULB.

o User ID five did not specify a user name. At the time of our review, the account had committed 218 security violations since the last access date of December 5, 1994.

o User ID six listed only a first name. The account had committed five security violations as of the last access date of December 9, 1994.

o User IDs six and seven are assigned to MSC contractor personnel who perform emergency support for the ULB.

When these problems were disclosed, MSC Headquarters corrected the discrepancies associated with user IDs one, five, and six. MSC Headquarters also deleted four other user IDs. Based on the problems found in our partial review, a complete review of user IDs is needed.

According to a terminal area security officer at MSC Headquarters, the user IDs for departing employees are removed by the customer support center's staff during an employee's check-out. However, our audit work showed that the user IDs were not being removed. MSC must establish computer security procedures for immediate cancellation of user IDs upon termination of employment or other appropriate circumstances.

MSC did not update the access listings; therefore, when an old user ID is reissued, the new employee may automatically be given the same level of access, such as the ability to alter data within programs and files, as the former employee. MSC should delete access to the files and programs linked to the user's account after individual user IDs are removed. MSC should require verification of the need for access and verify the appropriate access levels before issuing new user IDs.

MSC maintained user IDs six and seven for emergency contractor support. This was done to allow the contractors to recover quickly from an after-hours or weekend computer emergency. According to MSC Headquarters, several days would be needed to reestablish a user ID. The need to retain the user IDs may be justified. However, allowing contractor employees to have continual access to the MSC system with few security checks exposes MSC Headquarters programs and data to unnecessary risk. MSC Headquarters should restrict contractors to authorized tasks.

Computer Associates Access Control Facility Version 2 Software. DoD Directive 5200.28 requires that MSC have safeguards to ensure that each person with access to the automated information system is held accountable for his or her actions. Additionally, DoD Manual 5200.28-M, "ADP Security Manual," June 25, 1979, requires users to identify themselves to the system before gaining access. The Defense Information Processing Center's mainframe computer has Access Control Facility Version 2 software to control computer security and accountability for users. The software works with the computer's operating system to control access to the computer by allowing access for valid requests and denying access for invalid attempts. The invalid attempts are logged as security violations and are tracked to individual user IDs. The security software can also record attempts at improper access or attempts to access sensitive files. However, the security log feature of the Access Control Facility Version 2 software was not being used. Therefore, the computer security officer could not readily detect improper access to the system or review access to sensitive files. MSC should activate the security log feature of the Access Control Facility Version 2 software to provide an audit trail of access to the ULB programs and data.

The problems associated with computer security could have been avoided. DoD Directive 5200.28 provided guidance on the level of access to security programs, and DoD Manual 5200.28 provided guidance on accountability for user IDs. If the ADP security officer and his staff had conducted periodic reviews of security operations for compliance with security procedures, these weaknesses in security could have been corrected.

Training and Supervision of ADP Staff

The ADP security officer did not properly train or supervise the ADPSSOs in their security responsibilities. The ADP security officer provided inadequate technical training on security to his ADPSSOs and did not execute his supervisory responsibilities. ADPSSOs were unfamiliar with the requirements of DoD and MSC directives and failed to implement the guidance. Because security policies and procedures were not implemented, the ULB programs and data were vulnerable to unauthorized access and changes.

Training. OPNAV Instruction 5239.1A states that security training is the key element of the Navy's ADP security program. The training can be formal or informal, and can range from security awareness training for top-level managers to highly technical security training for ADP operations personnel.

We reviewed the training materials for "Basic Automated Information System Security Awareness," July 1994, provided to us by the ADP security officer at MSC Headquarters. The ADP security officer administers this 1-hour training program annually to terminal area security officers and ADP systems security officers. The program consists of briefing charts and a security awareness video, emphasizing security awareness for end users. Basic security awareness training may be adequate for terminal area security officers; however, because of the technical nature of the ADPSSO responsibilities, training for the ADPSSOs should be more specialized. OPNAV Instruction 5239.1A, Appendix D, outlines the Navy's ADP security curriculum. The Navy recommends two 40-hour ADP security courses. In addition, training on the administration of the Access Control Facility Version 2 software could improve the security officers' understanding of the software's capabilities. MSC should revise the security and training program for ADPSSOs to provide more technical information on maintaining computer security.

Supervision. The ADP security officer did not properly supervise the ADPSSOs. The ADP security officer failed to execute his responsibilities as defined in OPNAV Instruction 5239.1A and COMSC Instruction 5510.8D. The problems associated with the level of access and the user IDs occurred before the current ADPSSO was appointed on December 16, 1994. The ADP security officer did not ensure that the ADPSSOs adhered to policies and procedures. The ADPSSOs were not aware of basic security information about the ULB. Consequently, the ADPSSOs did not properly perform the duties or execute the responsibilities as established in security regulations.

The Navy instructions specified the supervisory responsibilities of the ADP security officer. The ADP security officer is responsible for training and supervising the ADPSSOs. After an ADPSSO is appointed, the ADP security officer should ensure that the ADPSSO follows existing security regulations.

The ADPSSOs were unaware of the security violations found during our review of the ULB. The ADPSSOs had not reviewed the user access listing to verify need and authorization. In addition, the ADPSSOs were unaware

that seven user IDs for unauthorized personnel were still in use. Proper supervision from the ADP security officer should have prevented those shortcomings.

The ADP security officer was aware of the weaknesses in computer security. During the period September 24 to November 4, 1994, the ADP security officer, with contractor representatives and application representatives, performed a risk assessment that included the ULB. The assessment showed the need for both improved internal controls and an increased awareness of security initiatives already taken. The assessment also showed the vulnerability of the ULB to disclosure of sensitive information. In addition, the ULB had few protections against fraudulent diversion of program funds, and the ULB could not identify employees responsible for system changes.

Conclusion. The ADPSSOs did not follow the security policies and procedures because they lacked training and supervision by the ADP security officer. In addition, basic internal controls, such as removing the user IDs of departing MSC employees, did not work. User IDs were still active several months after the most recent access. Proper training and supervision must be in place to ensure effective computer security.

Recommendations, Management Comments, and Audit Response

B. We recommend that the Commander, Military Sealift Command:

1. Establish computer security policies that direct:

a. Verification of the need for access and verification of appropriate access levels before issuing new user identification codes.

Management Comments. MSC concurred. The Automatic Data Processing Security Officer and the project managers will define access levels and create rules associated with the groups for each MSC application. These actions will be completed by September 1995.

b. Deletion of files and programs linked to user accounts after individual user identification codes are removed.

Management Comments. MSC concurred. MSC agreed that whenever a specific User ID is deleted, all associated data sets should be deleted. MSC stated that the deletion of associated data sets with a specific user ID is automatically done by the data processing center. This occurs at least once a week. MSC will take action by September 1995 to ensure that the new data processing center in Mechanicsburg deletes all Access Control Facility Version 2 software rules associated with a user ID.

Audit Response. Management comments were fully responsive. However, the data processing center does not automatically delete data sets associated with specific user IDs scheduled for deletion. We found that the MSC requested deletion of specific user IDs on January 9, 1995. On February 27, 1995, nearly 6 weeks later, a list of access programs and data sets associated with the specific user IDs to be deleted was still in effect. The user IDs were not deleted in the next program load. At the new data processing center in Mechanicsburg, Pennsylvania, MSC must ensure that all deletions of time sharing option accounts and associated data sets take place at the same time. No further comments are required.

2. Review periodically the user identification codes and access levels for all employees, as required by DoD Directive 5200.28, "Security Requirements for Automated Information Systems," March 21, 1988.

Management Comments. MSC concurred and stated that the review will be completed monthly at Headquarters and Area Commands. This action will begin in June 1995 after the transition of the Defense Information Processing Center from Washington, D.C., to Mechanicsburg, Pennsylvania.

3. Cancel user identification codes immediately upon termination of employment or other appropriate circumstances, as required by OPNAV [Naval Operations] Instruction 5239.1A, "Department of the Navy Automatic Data Processing Security Program," April 1, 1985.

Management Comments. MSC concurred and stated that the policy is already in effect, but will be improved by immediate training of the employees in the MSC Customer Support Center.

4. Develop access procedures that will restrict contractor employees to authorized tasks as defined in DoD Directive 5200.28, "Security Requirements for Automated Information Systems," March 21, 1988.

Management Comments. MSC concurred. Responsible personnel will define access levels (groups) and create rules associated with these groups for each application. Action will be completed by September 1995.

5. Activate the Access Control Facility Version 2 software or other access software used by the Military Sealift Command to establish an audit trail for detecting unauthorized access, as defined in OPNAV [Naval Operations] Instruction 5239.1A, "Department of the Navy Automatic Data Processing Security Program," April 1, 1985.

Management Comments. MSC concurred. MSC will confer with the support staff for the Access Control Facility Version 2 software to develop logon accesses to the system that do not degrade system performance. This action will be completed by June 1996.

Audit Response. Although MSC concurred with the recommendation, we do not consider the planned actions to be fully responsive. MSC operates a computer system that does not maintain an audit trail or log for detecting unauthorized access. This shortcoming is not in compliance with OPNAV

[Naval Operations] Instruction 5239.1A, "Department of the Navy Automatic Data Processing Security Program," April 1, 1985. All data programs associated with this system are vulnerable to unauthorized access without detection. This problem should be corrected before June 1996. We request that MSC reconsider the completion date and provide an explanation of the time frame required to implement this recommendation.

6. Direct the automatic data processing security officer to conduct periodic reviews of security operations for compliance with security procedures, as defined in OPNAV [Naval Operations] Instruction 5239.1A, "Department of the Navy Automatic Data Processing Security Program," April 1, 1985, and COMSC [Commander Military Sealift Command] Instruction 5510.8D, May 26, 1992.

Management Comments. MSC concurred. The Automatic Data Processing Security Officer will maintain exception reports with names and relevant data on user IDs. Lists of unauthorized access attempts will be part of the audit trail by June 1996. Other exception reports will be reviewed to determine whether action is needed. Reviews will begin in January 1996.

Audit Response. Although MSC concurred with the recommendation, we do not consider the planned actions to be fully responsive. Exception reports can provide a basis for conducting periodic reviews of security operations. However, waiting until January 1996 to begin the review allows nearly 6 months to pass without a proper review of users who leave the command or user IDs of task-restricted users. As stated in the audit response to management comments on Recommendation B.5., this problem should be corrected before June 1996. We request that MSC reconsider the completion date and provide an explanation of the time frame required to implement the reviews of security operations.

7. Revise the security and training program for automatic data processing systems security officers to provide more technical information on the Access Control Facility Version 2 software and to comply with the automatic data processing training curriculum, as defined in Appendix D of OPNAV [Naval Operations] Instruction 5239.1A, "Department of the Navy Automatic Data Processing Security Program," April 1, 1985.

Management Comments. MSC concurred. MSC stated that the security personnel and project managers will provide training in the Access Control Facility Version 2 software. In addition, the security officer will conduct an annual refresher course in security. Training will begin by January 1996.

Audit Response. Although MSC concurred with the recommendation, we do not consider the comments fully responsive. MSC did not address the security training as defined in Appendix D of OPNAV [Naval Operations] Instruction 5239.1A, "Department of the Navy Automatic Data Processing Security Program," April 1, 1985. ADP training, in addition to training on the Access Control Facility Version 2 software, is required. We request that MSC reconsider its position and provide additional comments in its response to the final report.

8. Direct the automatic data processing security officer to properly supervise computer security staff as required by OPNAV [Naval Operations] Instruction 5239.1A, "Department of the Navy Automatic Data Processing Program," May 1, 1985, and COMSC [Commander, Military Sealift Command] Instruction 5510.8D, "COMSC Security Manual," May 26, 1992.

Management Comments. MSC concurred. The ADPSO will ensure that the ADPSSOs maintain the required documentation and be current on other requirements. The ADPSSO will provide security training on automatic information systems to users and technical support personnel by January 1996.

Audit Response. Management comments were fully responsive. However, in listing the duties expected of the ADPSSOs, MSC omitted the responsibilities of the ADPSSOs that lead to the weaknesses identified during the audit. The ADPSO must ensure that the ADPSSOs comply with the Navy instruction, which states that the ADPSSO should:

> Monitor system activity, including identification of the levels and types of data handled by the ADP systems, assignment of passwords and review of audit trails, output, etc., to ensure compliance with security directives and procedures.

Management Comments Required

The Commander, Military Sealift Command, is requested to comment on the items indicated with an X in Table 2.

Table 2. Management Comments Required on Finding B.

Recommendation Number	Concur/ Nonconcur	Proposed Action	Completion Date
5.	X	X	X
6.	X	X	X
7.	X	X	X

Part II - Additional Information

Appendix A. Scope and Methodology

Scope and Methodology

Our audit evaluated the internal control structure for the Military Sealift Command portion of the transportation business area of the DBOF. The internal control structure is the organization, methods, and measures with which an organization performs its activities to accomplish its objectives. Internal controls are the tools established by management to accomplish the organization's objectives.

The USTRANSCOM FY 1993 Statement of Financial Position was the basis for the preliminary estimate of materiality. The four material accounts selected for review were Accounts Receivable; Property, Plant, and Equipment; Accounts Payable; and Other Non-Federal Liabilities. The review showed that MSC and the Air Mobility Command made up $2.7 billion out of $3.1 billion reported in USTRANSCOM FY 1993 financial statements for the four selected accounts.

To review the Statement of Financial Position, we examined four account balances that were determined to be material based on the USTRANSCOM FY 1993 Statement of Financial Position. We selected two asset accounts, which made up $1.7 billion out of $1.9 billion of the total assets reported (excluding Fund Balances with Treasury), and two liability accounts, which made up $1.4 billion out of $1.5 billion of total liabilities reported. Accounts Receivable; Property, Plant, and Equipment; Accounts Payable; and Other Non-Federal Liabilities were most significant to the users of the Statement of Financial Position. At MSC, the accounts that were reviewed as part of the Other Non-Federal Liabilities on the consolidated statement were listed as Accrued Expenses. On the MSC portion of the USTRANSCOM FY 1994 Statement of Financial Position, the two asset accounts totaled $1.8 billion, and the two liability accounts totaled $2.1 billion. We did not quantify any errors found during the review. To achieve the audit objective, we:

- prepared the FY 1994 client profile and account cycle memorandums;

- examined the policies and procedures that applied to MSC computer operations and that created the environment in which application controls and user control techniques operated;

- determined the level of automation in the MSC automatic data processing system and assessed the manual interfaces between systems;

- determined the reliability of computer-processed data used during the audit;

o determined the processes used to prepare the MSC financial statement, including significant accounting estimates, disclosures, and computerized processing;

o determined the processing involved, from the initiation of transactions to their inclusion in the financial statements, including the nature and type of records, journals, ledgers, and source documents;

o determined whether account transactions were valid, accurate, properly classified, and recorded in the proper accounting period;

o reviewed the effectiveness of the MSC management control program in compliance with DoD Directive 5010.38, "Internal Management Control Program," by comparing the Area Commands' Annual Certification Statement with the MSC Headquarters Annual Certification Letter; and

o assessed compliance with laws and regulations and standard operating procedures for each account cycle memorandum reviewed.

Our review was made primarily at MTMC and MSC. The Air Force Audit Agency evaluated the adequacy and effectiveness of selected internal controls and assessed compliance with laws and regulations applicable to the FY 1994 Statement of Financial Position for the Airlift Services Division of USTRANSCOM. We discontinued our review of MTMC after determining that findings reported by the Army Audit Agency in its FY 1992 audit were still unresolved, and after performing a preliminary assessment of accounting conditions at the Defense Accounting Office, Bayonne, New Jersey.

Scope Limitation. We limited our review to four accounts on the MSC Statement of Financial Position for FY 1994: Accounts Receivable; Property, Plant, and Equipment; Accounts Payable; and Accrued Expenses. In addition, we reviewed the management control program and the MSC financial statement reporting process. We did not perform substantive testing of the transactions supporting the account balances on the FY 1994 Statement of Financial Position.

Use of Computer-Processed Data. To achieve the audit objective, we limited our review of computer-processed data to the data contained in the ULB and the Revenue Lift System at MSC Headquarters. To assess the reliability of the data, we observed the data input to the ULB as it first entered the system, checked the progress of the data input, reviewed output reports, and compared the output with the expected results. Based on our limited review, we considered the data in the ULB reliable and did not find errors that would preclude the use of the computer-processed data.

Audit Period, Standards, and Locations. This financial statement audit was made from June 1994 through April 1995 in accordance with auditing standards issued by the Comptroller General of the United States as implemented by the Inspector General, DoD. Accordingly, we included such tests of internal controls as were considered necessary. Appendix F lists the organizations visited or contacted during the audit.

Management Control Program

DoD Directive 5010.38, "Internal Management Control Program," April 14, 1987, requires DoD organizations to have internal control techniques in place to ensure that events are occurring as desired, and to have a program to evaluate those controls. We determined whether MSC complied with DoD Directive 5010.38. Specifically, we reviewed MSC internal controls over the transactions supporting account balances on the Statement of Financial Position for FY 1994 for Accounts Receivable; Property, Plant, and Equipment; Accounts Payable; and Accrued Expenses. In addition, we reviewed the internal controls associated with access and accountability in the ULB application programs and data. Also, we determined the extent to which MSC evaluated its internal controls over accounting and related systems and computer security and the results of any self-evaluation.

Adequacy of Controls. We identified material internal control weaknesses at MSC as defined by DoD Directive 5010.38. MSC internal controls for accounting and related systems were not adequate to establish the transaction trail from the account balances to transactions supporting the MSC Statement of Financial Position for FY 1994. In addition, the internal controls for computer security were not adequate to prevent unauthorized access to the ULB application programs and data. Recommendations A.1. through A.8. and B.1. through B.8., if implemented, will correct the weaknesses. Although we could not quantify the potential monetary benefits associated with implementing the recommendations, we identified other potential benefits. See Appendix E for a summary of the potential benefits resulting from the audit. A copy of the report will be provided to the senior official responsible for internal controls in the Office of the Secretary of the Navy.

Adequacy of MSC Self-Evaluation of Applicable Internal Controls. MSC officials identified accounting and related systems as an assessable unit and, in our opinion, correctly identified the risk associated with those systems as high. In its Annual Statement of Assurance, MSC identified and reported material internal control weaknesses, such as inaccurate accruals and inaccurate Accounts Receivable, resulting from the accounting and related systems. MSC has developed, but has not fully implemented, procedures to correct the weaknesses. We found additional material internal control weaknesses, not identified by MSC, in the accounting and related systems. MSC had not:

- o used the DoD Standard General Ledger chart of accounts;
- o used the Allowance for Loss on Accounts Receivable account from the DoD chart of accounts;
- o established procedures to substantiate the aging of Accounts Receivable;
- o established standard operating procedures for substantiating the cost figures used to accrue expenses for dry cargo ships; and

o required that departmental standard operating procedures and desk procedures be developed for each section of the Accounting Division and VIPS operations, and ensured that the procedures are accurate, updated, and readily accessible.

In addition, MSC officials identified information technology as an assessable unit, and correctly identified the risk associated with computer security as high. The ADP security officer reviewed the ULB access controls under a risk assessment needed for system accreditation. However, although the risk assessment correctly showed the same material weaknesses we identified, the ADP security officer did not include those results in the management control program or implement corrective actions. MSC officials could not explain why they did not include the risk assessment results in the management control program review or implement corrective actions.

Appendix B. Prior Audits and Other Reviews

Inspector General, DoD

Report No.	Report Title	Date
94-163	Management Data Used to Manage the U.S. Transportation Command and the Military Department Transportation Organizations	June 30, 1994
94-161	Consolidated Statement of Financial Position of the Defense Business Operations Fund for FY 1993	June 30, 1994
94-082	Financial Management of the Defense Business Operations Fund - FY 1992	April 11, 1994
93-134	Principal and Combining Financial Statements of the Defense Business Operations Fund - FY 1992	June 30, 1993
93-110	Consolidated Financial Statements of the Defense Finance and Accounting Service Revolving Fund of the Defense Business Operations Fund - FY 1992	June 11, 1993
92-INS-07	United States Transportation Command	January 1992

Naval Audit Service

Report No.	Report Title	Date
010-95	Sponsor-Funded Equipment at Selected Navy Defense Business Operations Fund Activities	December 2, 1994
053-H-94	FY 1993 Consolidating Financial Statements of the Department of the Navy Defense Business Operations Fund	June 29, 1994
053-H-93	FY 1992 Consolidating Financial Statements of the Department of the Navy Defense Business Operations Fund	June 30, 1993

Appendix C. Other Matters of Interest

DFAS Guidance. Since the incorporation of USTRANSCOM into DBOF Transportation, the responsibility for issuing accounting and financial reporting guidance to the USTRANSCOM components has been undefined. DFAS does not have clear procedures for the dissemination of accounting guidance to the USTRANSCOM components. Since Defense transportation activities have been consolidated, the Service transportation components continue to rely on the Service-related DFAS Centers for accounting functions and guidance. For example, MSC did not receive DoD Regulation 7000.14-R, which required all agencies to establish an allowance for uncollectible Accounts Receivable. As a result, MSC followed the Navy Comptroller Manual, which had not been updated to reflect the change. MSC stated that DFAS Denver Center does not inform MSC of changes in guidance, so MSC cannot stay in compliance.

The DFAS Denver Center is responsible for providing accounting and financial reporting support for USTRANSCOM and its components; however, the Center had not provided accounting guidance. DFAS Headquarters needs to instruct USTRANSCOM components in their responsibilities for accounting and financial reporting. The IG, DoD, will issue a separate audit report on DoD-wide problems with support for accounting and financial reporting.

Appendix D. Selected Military Sealift Command Accounting and Related Systems

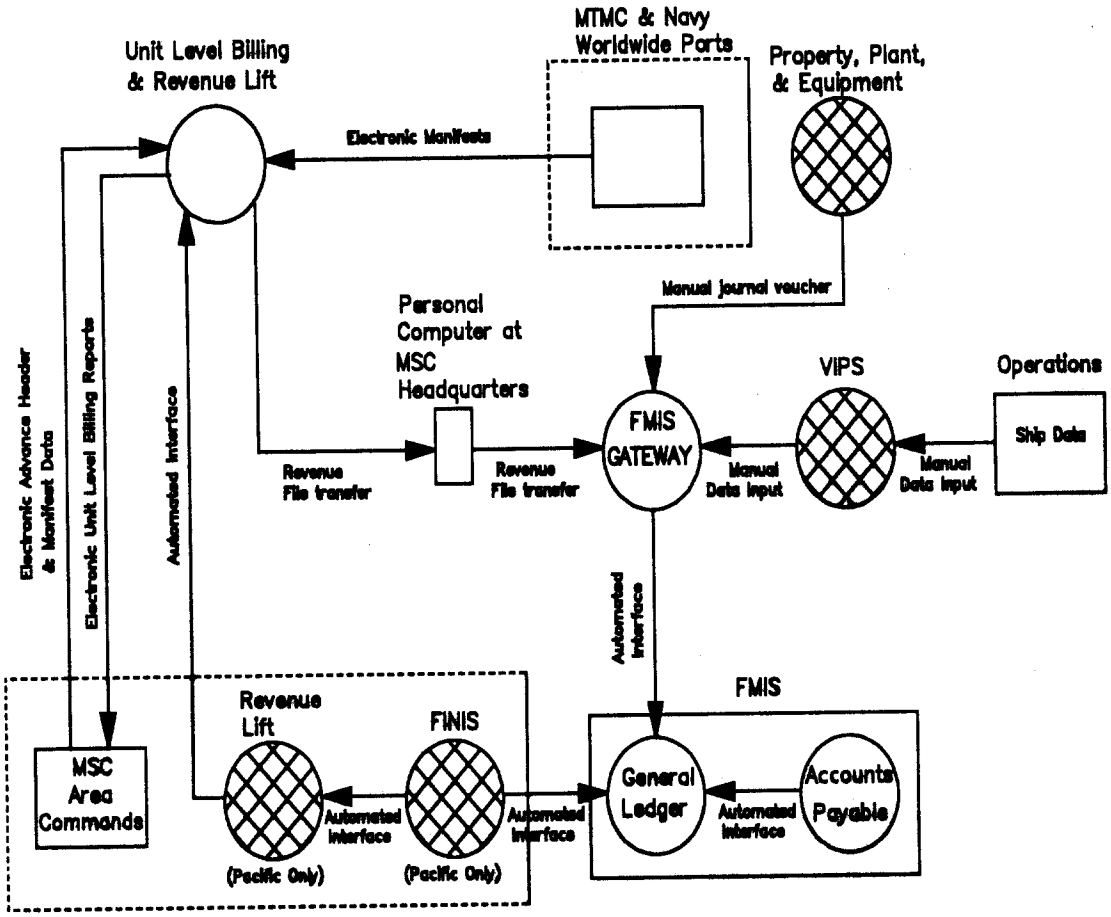

Legend
- ⊗ Semiautomated System
- ○ Automated System
- ---- System or Entity Outside MSC Headquarters

This diagram shows how the various automated and semiautomated systems interface with the FMIS General Ledger at MSC Headquarters.

Appendix E. Summary of Potential Benefits Resulting From Audit

Recommendation Reference	Description of Benefit	Amount and/or Type of Benefit
A.1. - A.3., A.5.	Compliance. Provides compliance with existing laws and DoD regulations.	Nonmonetary.
A.4., A.6. - A.8.	Internal controls. Provides control over the financial data used in the financial statements.	Nonmonetary.
B.1.	Internal controls. Provides for stricter controls over access to computer application programs and data.	Nonmonetary.
B.2. - B.8.	Compliance. Provides compliance with existing laws and DoD and Navy regulations.	Nonmonetary.

Appendix F. Organizations Visited or Contacted

Office of the Secretary of Defense

Under Secretary of Defense (Comptroller), Office of the Deputy Chief Financial Officer, Directorate for Financial Review and Analysis, Washington, DC

Department of the Army

Military Traffic Management Command, Headquarters, Falls Church, VA
- Military Traffic Management Command, Eastern Area Headquarters, U.S. Army Garrison, Bayonne, NJ
- Military Traffic Management Command, Western Area Headquarters, Oakland Army Base, Oakland, CA

Army Audit Agency, Alexandria, VA

Department of the Navy

Office of the Assistant Secretary of the Navy (Financial Management and Comptroller), Office of Finance and Accounting, Washington, DC

Military Sealift Command, Washington, DC
- Military Sealift Command, Central Technical Activity, Washington, DC
- Military Sealift Command, Atlantic, Bayonne, NJ
- Military Sealift Command, Pacific, Oakland, CA

Naval Audit Service, Falls Church, VA

Department of the Air Force

Air Force Audit Agency, Scott Air Force Base, IL

Unified Command

U.S. Transportation Command, Scott Air Force Base, IL

Other Defense Organizations

Defense Finance and Accounting Service, Arlington, VA
- Defense Finance and Accounting Service Indianapolis Center, Indianapolis, IN
  - Defense Accounting Office, Bayonne, NJ
  - Defense Accounting Office, Arlington, VA
- Defense Finance and Accounting Service Denver Center, Denver, CO

Defense Information Processing Center, Defense Information Systems Agency, Washington, DC

Appendix G. Report Distribution

Office of the Secretary of Defense

Under Secretary of Defense (Acquisition and Technology)
  Director, Defense Logistics Studies Information Exchange
Under Secretary of Defense (Comptroller)
  Deputy Chief Financial Officer
  Deputy Comptroller (Program/Budget)
Deputy Under Secretary of Defense (Logistics)
Assistant to the Secretary of Defense (Public Affairs)

Department of the Army

Commander, Military Traffic Management Command
Auditor General, Department of the Army

Department of the Navy

Assistant Secretary of the Navy (Financial Management and Comptroller)
Commander, Military Sealift Command
Auditor General, Department of the Navy

Department of the Air Force

Assistant Secretary of the Air Force (Financial Management and Comptroller)
Commander, Air Mobility Command
Auditor General, Department of the Air Force

Unified Command

Commander in Chief, U.S. Transportation Command

Other Defense Organizations

Director, Defense Finance and Accounting Service
Director, Defense Logistics Agency
Director, Defense Contract Audit Agency
Inspector General, Central Imagery Office
Inspector General, National Security Agency
Director, National Security Agency, Audit and IMC Liaison

Non-Defense Federal Organizations

Office of Management and Budget
Technical Information Center, National Security and International Affairs Division, General Accounting Office

Chair and ranking minority member of each of the following congressional committees and subcommittees:

- Senate Committee on Appropriations
  - Senate Subcommittee on Defense, Committee on Appropriations
- Senate Committee on Armed Services
- Senate Committee on Governmental Affairs
- House Committee on Appropriations
  - House Subcommittee on National Security, Committee on Appropriations
- House Committee on Government Reform and Oversight
  - House Subcommittee on National Security, International Affairs, and Criminal Justice, Committee on Government Reform and Oversight
- House Committee on National Security

Part III - Management Comments

Military Sealift Command Comments

UNITED STATES TRANSPORTATION COMMAND
508 SCOTT DR
SCOTT AIR FORCE BASE IL 62225-5357

12 June 1995

MEMORANDUM FOR DoD IG (Ms. Barbara Sauls)
400 Army Navy Drive
Arlington VA 22202-2884

FROM: TCJ8

SUBJECT: DoD IG Draft Audit Report on Management Controls for the Military Sealift Command Portion of the Transportation Business Area of the FY94 Defense Business Operations Fund Financial Statements (Project No. 4FM-2011)

1. Attached is the Military Sealift Command's response to subject draft audit report. We concur with their input.

2. USTRANSCOM/TCJ8 is fully aware of the many deficiencies in the accounting systems currently supporting DBOF-T, and we report problem areas in the Chief Financial Officers' (CFO) Act in our CFO Annual Statement of Assurance. We are working diligently with Defense Accounting and Finance and the Transportation Component Commands to select an interim migratory accounting system to support DBOF-T until a DoD-wide standardized system becomes available. Our efforts should result in preventing the types of problems identified in the DoD IG report, e.g., not using DoD Standard General Ledger chart of accounts.

for ROBERT L. RACHOR, JR.
Captain, USN
Director, Program Analysis
and Financial Management

Attachment:
COMSC Ltr, 9 Jun 95 w/Atch

COMSC RESPONSE
TO
DODIG AUDIT REPORT
"MANAGEMENT CONTROLS FOR THE MILITARY SEALIFT COMMAND PORTION OF THE TRANSPORTATION BUSINESS AREA OF THE FY 1994 DEFENSE BUSINESS OPERATIONS FUND FINANCIAL STATEMENTS (PROJECT NO. 4FH-2011)"
OF
12 MAY 95

Recommendation A1. Use the DoD Standard General Ledger Chart of Accounts as required by DoD Regulation 7000.14-R, "DoD Financial Management," Volume 1, May 1993.

COMSC Comment. Concur in part. MSC has developed a crosswalk to the DoD Chart of Accounts (COA) for reporting to DFAS-Denver. The MSC accounting system (FMIS) is currently being reviewed along with the Corps of Engineers Financial Management System (CEFMS) for the interim migratory transportation financial system. The resources required to make this change are significant and it is suggested that this be held in abeyance until the FMIS vs. CEFMS decision is made. If FMIS is chosen, the DoD COA will be utilized.

Recommendation A2. Use of Allowance for Loss on Accounts Receivable account from the DoD COA and establish the criteria for determining the allowance for FY 1995, as stated in DoD Regulation 7000.14-R, "DoD Financial Management," Volume 1, May 1993.

COMSC Comment. Concur. MSC will establish an Allowance for Loss on Accounts Receivable and establish the criteria for determining the allowance before the end of FY 95.

Recommendation A3. Stop estimating the aging data for Accounts Receivable and establish procedures that use data in the aging of Accounts Receivable as required in DoD Regulation 7000.14-R, "DoD Financial Management," Volume 1, May 1993.

COMSC Comment. Concur. COMSC is now using actual data for aging of Accounts Receivable. MSC's ACCESS based system, now in place, has this capability. Action is complete.

Recommendation A4. Implement procedures to analyze and document whether the new Cargo Accrual System effectively corrects the deficiencies in the Financial Information System.

COMSC Comment. Concur. Under the new Cargo Accrual System revenue and expense shipment, worksheets are automatically developed at the same time using the same source document. Revenue and expense workload must be matched. Expenses unpaid and revenues unbilled are automatically calculated at the end of the month. Worksheets and financial results under the new Cargo Accrual System are continually being reviewed and analyzed by COMSCLANT, COMSCPAC, and COMSC personnel. Corrective actions are promptly taken with any system problems identified. Action is considered complete.

Recommendation A5. Follow procedures to validate the Vessel Information Planning and Analysis System dry cargo data used to establish Accrued Expenses, as stated in Military Sealift Command Instruction 4610.32D, "Vessel Information Planning and Analysis System (VIPS) Reporting Instructions," September 6, 1990.

COMSC Comment. Concur. VIPS replacement prototype (under IC3 migration project) will provide accrued expenses either through direct interface or indirect (via diskette) in accordance with COMSCINST 4610.32D. Prototype is expected to be complete in December 1995.

Recommendation A6. Establish standard operating procedures for substantiating the cost figures used to accrue dry cargo expenses.

COMSC Comment. Concur. VIPS replacement system will provide accrued expenses in accordance with COMSCINST 4610.32D. Prototype is expected to be completed in December 1995.

Recommendation A7. Determine the training needs of personnel who work with the Vessel Information Planning and Analysis System and provide training on the related regulations.

COMSC Comment. Concur. VIPS currently has available a Users Manual along with several technical guides. A training environment or tutorial will be developed for the VIPS prototype system. The prototype is expected to be completed in December 1995.

Recommendation A8. Develop departmental standard operating procedures and desk procedures for each section of the accounting division and Vessel Information Planning and Analysis System operations and verify that the procedures are accurate, updated and readily accessible.

2

COMSC Comment. Concur. Procedures will be developed in conjunction with changes in VIPS and accounting procedures. Reengineering efforts at MSC and automation efforts under way will all impact on these procedures. Target completion date is end of FY 96.

Recommendation B1-a. Establish computer security policies that direct verification of the need for access and verification of appropriate access levels before issuing new user identification codes.

COMSC Comment. Concur. The ADPSSO and the project managers will define access levels (groups) and create rules associated with the groups, for each MSC application. This will be completed by September 1995.

Recommendation B1-b. Establish computer security policies that direct deletion of files and programs linked to user accounts after individual user identification codes are removed.

COMSC Comment. Concur. For Data Sets associated with a specific User ID, this service is provided by our DPC automatically. Once a User ID is deleted, all associated data sets are deleted during the next IPL of the system. This occurs, at minimum, on a weekly basis. MSC will take action, by September 1995 to see that our new DPC (DMC Mechanicsburg) takes action to delete all ACF2 rules associated with a User ID that is being deleted.

Recommendation B2. Review periodically the user identification codes and access levels for all employees, as required by DoD Directive 5200.28, "Security Requirements for Automated Information Systems," March 21, 1988.

COMSC Comment. Concur. Review will be completed monthly at Headquarters and Area Commands and corrections will be made as needed. This will begin upon the completion of transition from DIPC Washington to DMC Mechanicsburg in June 1995.

Recommendation B3. Cancel user identification codes immediately upon termination of employment or other appropriate circumstances, as required by OPNAV [Naval Operations] Instruction 5239.1A, "Department of the Navy Automatic Data Processing Security Program," March 21, 1988.

COMSC Comment. Concur. This policy is already in effect and will be improved by providing immediate training to the MSC Customer Support Center employees to make use of "Report of

3

Accessions and Separations" which is prepared by the COMSC Personnel Office. Action is complete.

Recommendation B4. Develop access procedures that will restrict contractor employees to authorized tasks as defined in DoD Directive 5200.28, "Security Requirements for Automated Information Systems," March 21, 1988.

COMSC Comment. Concur. By September 1995 the ADPSSO and the project managers will define access levels (groups) and create rules associated with these Groups, for each MSC application.

Recommendation B5. Activate the Access Control Facility Version 2 software or other access software used by the Military Sealift Command to establish an audit trail for detecting unauthorized access, as defined in OPNAV [Naval Operations] Instruction 5239.1A, "Department of the Navy Automatic Data Processing Security Program," April 1, 1985.

COMSC Comment. Concur. MSC will confer with the new DPC (DMC Mechanicsburg) ACF-2 support people to balance the level of logging with the system overhead required to log accesses to reduce degrading performance of the system. This will be completed by June 1996.

Recommendation B6. Direct the automatic data processing security officer to conduct periodic reviews of security operations for compliance with security procedures, as defined in OPNAV [Naval Operations] Instruction 5239.1A, "Department of the Navy Automatic Data Processing Security Program," April 1, 1985, and COMSC [Commander Military Sealift Command] Instruction 5510.8D, May 26, 1992.

COMSC Comment. Concur. The ADPSO will direct the ADPSSOs to maintain in their files an exception report with entries of, ID codes of users who have left, names of (verification in progress) prospective user ID codes, ID codes of task-restricted users, ID codes of users to be reviewed along with unauthorized access attempts recorded the audit trail by June 1996. The ADPSO will periodically do joint review, along with the ADPSSO of each AIS, of the exception reports, to ensure that all exceptions are being tracked and worked. These reviews will commence January 1996.

Recommendation B7. Revise the security and training program for automatic data processing systems security officers to provide more technical information on automatic data processing training curriculum, as defined in Appendix D of OPNAV [Naval Operations] Instruction 5239.1A, "Department of the Navy Automatic Data Processing Security Program," April 1, 1985.

4

COMSC Comment. Concur. The MSC ADPSO and the CTA project managers will work with the new DPC (DMC Mechanicsburg) ACF staff to set up training for the MSC and CTA ADPSSOs, to gain proficiency in using the ACF2 Facility to effectively control access to the MSC AIS applications running at the Mechanicsburg facility, and to properly apply options of the ACF2 audit capability. The ADPSO will conduct an annual refresher overview of duties. Training will begin by January 1996.

Recommendation B8. Direct the automatic data processing security officer to properly supervise computer security staff as required by OPNAV [Naval Operations] Instruction 5239.1A, "Department of the Navy Automatic Data Processing Program," May 1, 1985, and COMSC [Commander, Military Sealift Command] Instruction 5510.8D, "COMSC Security Manual," May 26, 1992.

COMSC Comment. Concur. The ADPSO will ensure that ADPSSOs maintain documentation in support of accreditation, to keep current the AIS Security Plan, Risk Assessment, Security Test and Evaluation(ST&E), and Contingent Plan, maintain up-to-date inventory of hardware and currently implemented application releases. The ADPSO will ensure the ADPSSOs provide applicable users and TASOs with annual training sessions on AIS security to their systems by January 1996.

Comments on Finding A

Management's comments on Finding A in this report were omitted. Changes to the finding were made, as appropriate, for clarity and accuracy.

5

Audit Team Members

This report was produced by the Finance and Accounting Directorate, Office of the Assistant Inspector General for Auditing, DoD.

Russell A. Rau
Raymond D. Kidd
Barbara A. Sauls
Ronald D. Blake
Alvin E. Edwards
Jill P. Beck
Towanda L. Brown
David J. Touchette
Rhonda D. Carter
Roger L. Goodson
Duc Ngo
Gladys A. Edlin
Susanne B. Allen
Judy L. White