Audit Report

OFFICE OF THE INSPECTOR GENERAL

COST AND OPERATIONAL EFFECTIVENESS ANALYSIS FOR MARINE CORPS THIRD ECHELON TEST SET

Report No. 96-037 December 11, 1995

Department of Defense

Additional Copies

To obtain additional copies of this audit report, contact the Secondary Reports Distribution Unit, Analysis, Planning, and Technical Support Directorate at (703) 604-8937 (DSN 664-8937) or FAX (703) 604-8932.

Suggestions for Future Audits

To suggest ideas for or to request future audits, contact the Planning and Coordination Branch of the Analysis, Planning, and Technical Support Directorate at (703) 604-8939 (DSN 664-8939) or FAX (703) 604-8932. Ideas and requests can also be mailed to:

Inspector General, Department of Defense
OAIG-AUD (ATTN: APTS Audit Suggestions)
400 Army Navy Drive (Room 801)
Arlington, Virginia 22202-2884

Defense Hotline

To report fraud, waste, or abuse, contact the Defense Hotline by calling (800) 424-9098; by sending an electronic message to Hotline@DODIG.OSD.MIL; or by writing the Defense Hotline, The Pentagon, Washington, D.C. 20301-1900. The identity of each writer and caller is fully protected.

Acronyms

CASS	Consolidated Automated Support System
COEA	Cost and Operational Effectiveness Analysis
IFTE	Integrated Family of Test Equipment
TETS	Third Echelon Test Set

INSPECTOR GENERAL
DEPARTMENT OF DEFENSE
400 ARMY NAVY DRIVE
ARLINGTON, VIRGINIA 22202-2884

Report No. 96-037 December 11, 1995

MEMORANDUM FOR ASSISTANT SECRETARY OF THE NAVY (FINANCIAL MANAGEMENT AND COMPTROLLER)
COMMANDER, MARINE CORPS COMBAT DEVELOPMENT COMMAND
COMMANDER, MARINE CORPS SYSTEMS COMMAND

SUBJECT: Audit of Cost and Operational Effectiveness Analysis for Marine Corps Third Echelon Test Set (Project No. 5LB-5039)

Introduction

We are providing this report for information and use. This audit was performed in response to a congressional request from Senator Howell Heflin to review the accuracy of the Marine Corps cost and operational effectiveness analysis (COEA) for a third echelon test set (TETS). The Senator alleged that the COEA showed a decided bias toward the Marine Corps' proposed system alternative, referred to in the COEA as the automated test support unit prototype. The Senator expressed concern that the Marine Corps intended to issue a request for proposal for a TETS based on the findings of the COEA. The TETS acquisition program is an acquisition category IV program, and has an estimated total life cycle cost of nearly $208 million. (See glossary in Enclosure 1.)

Audit Results

The allegation was not substantiated. The Marine Corps used a COEA to support the acquisition of a TETS that was adequate in its methodology, objective in its evaluation of system alternatives, and reliable in its conclusions and recommendations. The Marine Corps' acquisition decision process effectively evaluated automatic test system alternatives for satisfying TETS requirements. Management controls applicable to the performance and review of the COEA process were adequate in that we identified no material management control weaknesses.

Audit Objectives

The overall audit objective was to review the accuracy of the COEA used by the Marine Corps to justify the purchase of an automatic test system, specifically a TETS. Special emphasis was placed on validating the Marine Corps acquisition decision process that resulted in the decision to acquire an automatic test system based on the automated test support unit prototype over other alternatives. We also reviewed the management control program as it related to the audit objectives.

Scope and Methodology

Scope and Methodology. We reviewed data from December 1991 through September 1995 to accomplish our audit objectives. We reviewed the methodology used to develop the TETS COEA, including the COEA study directive and analysis plan. We also interviewed the COEA study review team. We analyzed the COEA for overall accuracy and compliance with established DoD and Department of the Navy policies and procedures for preparing COEAs. We interviewed DoD, Army, Navy, Marine Corps, and contractor officials concerning the TETS program and automatic test system policy.

We reviewed the Marine Corps' decision process for evaluating automatic test system alternatives to satisfy third echelon testing requirements. We reviewed data the Marine Corps considered in deciding to pursue a TETS solution. We reviewed the capabilities of alternative systems analyzed in the COEA and witnessed demonstrations of the automated test support unit prototype, the direct support electrical system test set, general purpose interface assembly (direct support test set), and the Army integrated family of test equipment (IFTE) base shop test facility. We evaluated the conclusions of the test measurement and diagnostic study on automatic test system for Marine Corps ground weapon systems, the results of the automated test support unit prototype concept demonstration, the conclusions and recommendations of the COEA, the findings of the Institute for Defense Analyses study on DoD investment strategy for automatic test system, the conclusions of the concept studies performed on the Navy consolidated automated support system (CASS) and the Army IFTE, and DoD automatic test system policy and the significance each had on the Marine Corps acquisition strategy.

Audit Period, Standards, and Locations. This economy and efficiency audit was performed from May to September 1995. We conducted this audit in accordance with auditing standards issued by the Comptroller General of the United States as implemented by the Inspector General, DoD. We included tests of management controls considered necessary. We did not use computer-processed data or statistical sampling procedures for this audit. Enclosure 6 lists the organizations visited or contacted.

Management Control Program

DoD Directive 5010.38, "Internal Management Control Program," April 14, 1987, requires DoD managers to implement a comprehensive system of management controls that provides reasonable assurance that programs are operating as intended and to evaluate the adequacy of those controls.

Scope of Review of Management Control Program. We reviewed management control procedures regarding the performance and review of the COEA process. We did not assess the adequacy of management's self-evaluation of those controls because no discrepancies were noted.

Adequacy of Management Controls. Management controls associated with the performance and review of the COEA process were adequate as they applied to the audit objectives.

Prior Audits and Other Reviews

The Inspector General, DoD, has issued five prior audit reports related to automatic test systems within the last 5 years. In addition, we considered two other reviews concerning automatic test systems. See Enclosure 5 for a summary of the reports and reviews.

Background

TETS Operational Concept. The TETS operational concept is to provide a portable test capability for the Marine Corps at or near the forward edge of the battlefield area. Enclosure 2 depicts the TETS operational concept and describes the Marine Corp's third echelon level of operational maintenance. The TETS operational requirements document specifies that TETS will have the capability to test, diagnose, and screen electronic equipment for a wide variety of weapon systems. The TETS must be relatively compact, lightweight, and rugged and constructed from commercial-off-the-shelf, modified commercial-off-the-shelf, or nondevelopmental item equipment. Enclosure 3 is a brief history of the TETS program.

COEA. COEAs are prepared to aid decisionmakers by highlighting the relative advantages and disadvantages of the alternatives being considered. The TETS COEA was prepared in January 1994 to support the milestone I, concept demonstration, approval for TETS[1]. The TETS COEA was conducted to aid Marine Corps decisionmakers in judging whether any of the proposed alternatives to the current program offer sufficient military benefit to be worth the cost. Enclosure 4 is a discussion of efforts being taken to improve the COEA process.

The TETS COEA considered the following alternatives:

- an automated test support unit prototype;
- a base case;
- the CASS;
- the direct support test set;
- an IFTE base shop test facility.

[1]In May 1995, the milestone I (concept demonstration) approval was combined with milestone II (development) approval.

The TETS COEA recommended that Marine Corps decisionmakers:

o Eliminate CASS and IFTE base shop test facility because of the dominance of the automated test support unit prototype and the direct support test set in the areas of cost and capability.

o Select between the automated test support unit prototype and the direct support test set based on trade-offs between availability, capability, cost, and uncertainty.

Criteria. The criteria for developing COEAs are contained in DoD and Secretary of the Navy guidance. DoD Components are to implement the following criteria when developing COEAs.

o DoD Instruction 5000.2-M, part 4, section E, "Cost and Operational Effectiveness Analysis," February 23, 1991, establishes policies and procedures that form the basis for developing COEAs to support milestone decision reviews.

o DoD Manual 5000.2M, part 8, "Cost and Operational Effectiveness Analysis," February 23, 1991, provides general procedures and guidelines for developing COEAs.

o Secretary of the Navy Instruction 5000.2A, part 8, "Cost and Operational Effectiveness Analysis," December 9, 1992, establishes COEA responsibilities and procedures for the Department of the Navy.

Automatic Test System Policy. In April 1994, the Deputy Under Secretary of Defense for Acquisition and Technology issued a policy memorandum on automatic test systems. The policy requires DoD Components to satisfy all acquisition needs for automatic test systems by using designated automatic test system families or to obtain a waiver. It was established to minimize unique types of automatic test system being introduced into DoD field, depot, and manufacturing operations, and to encourage use of commercial-off-the-shelf testers and components, thereby reducing the logistics burdens and long-term costs to DoD. The Navy CASS and the Army IFTE were designated as the initial DoD families. Enclosure 4 further discusses issues concerning automatic test system policy.

Discussion

Overall Accuracy of the TETS COEA. The results of the TETS COEA showed that it was adequate in its methodology, objective in its evaluation of system alternatives, and reliable in its conclusions and recommendations.

COEA Methodology. The Marine Corps used a methodology consistent with established DoD and Service guidance for developing COEAs. The Marine Corps independently performed and appropriately tailored the COEA for the program milestone review being supported, specifically, the milestone I, concept demonstration, approval. With the COEA, the Marine Corps identified

the mission need, key constraints, and the automatic test system alternatives. It evaluated the alternatives in the areas of availability, capability, cost, and uncertainty.

Evaluation of System Alternatives. Using the COEA, the Marine Corps evaluated the system alternatives objectively and consistently based on available information. The study analysis team collected data from system documentation and recorded performance and personal observation of system demonstrations. It evaluated the system alternatives using approved measures of effectiveness based on the TETS requirements. The results of the COEA highlighted the advantages and disadvantages of each alternative, and presented reliable conclusions and recommendations on the proposed alternatives for use by acquisition decisionmakers.

COEA Conclusions and Recommendations. The conclusions and recommendations derived from the COEA provided reliable information to acquisition decisionmakers. The conclusions and recommendations were adequately supported by availability, capability, cost, and uncertainty analyses. The analyses clearly identified the automated test support unit prototype and the direct support test set as the dominant system alternatives that could satisfy the requirements of TETS. The resulting conclusions of the COEA were substantiated by concept studies on CASS and IFTE conducted in March 1995, as part of a waiver review for TETS.

Marine Corps Acquisition Decision Process. The Marine Corps acquisition decision process effectively evaluated automatic test system alternatives for satisfying TETS requirements. The Marine Corps selection of the automated test support unit prototype over other alternative solutions was supported by a number of factors. The most significant of the factors are discussed in the following paragraphs.

TETS Concept Demonstration. The TETS concept demonstration was a significant factor in the Marine Corps decision to pursue a TETS acquisition. In September 1992, the automated test support unit prototype demonstrated that a system constructed from commercial-off-the-shelf equipment could fulfill the TETS requirements. The results of the TETS concept demonstration prompted the Commander, Marine Corps Systems Command, to establish TETS as a program.

TETS COEA. The Marine Corps conducted a COEA in 1993, to determine a cost-effective solution to support all Marine Corps programs that require automatic test equipment. The COEA provided Marine Corps decisionmakers with information on the advantages and disadvantages of alternative systems for satisfying automatic testing requirements. Based on the results of the COEA and trade-off analyses between the automated test support unit prototype and the direct support test set, Marine Corps decisionmakers determined that the automated test support unit prototype solution provided the most affordable, operationally effective, and reliable approach.

Compliance With DoD Automatic Test System Policy. DoD automatic test system policy, issued on April 29, 1995, significantly impacted the TETS acquisition decision. As stated earlier, DoD policy for automatic test system required that DoD Components satisfy all acquisition needs for an automatic test system by using designated CASS and IFTE families, unless a waiver was granted.

The Marine Corps presented the TETS program to the automatic test system management board in the fall of 1994, for waiver recommendation. The management board reviewed the automated test support unit prototype and requested that concept studies be conducted on the CASS and IFTE programs to determine the feasibility of a satisfactory variant to satisfy the TETS requirements. Both the CASS and IFTE concept studies concluded that neither CASS nor IFTE could satisfy the power, reconfigurability and portability, size, and weight requirements of TETS. On May 1, 1995, the management board granted a waiver for TETS, allowing the Marine Corps Systems Command to procure an automatic test system that can satisfy the TETS requirements through open bid sample competition.[2]

Conclusion

The TETS COEA was conducted in accordance with established DoD and Department of the Navy policies and procedures. The allegation of bias toward the Marine Corps' proposed concept solution for a TETS was unsubstantiated. The conclusions of the COEA were reliable and validated by subsequent studies performed independent of the COEA process. The Marine Corps decision to pursue a TETS acquisition was based on an effective review of alternative systems and was compliant with DoD policy on automatic test systems.

Management Comments

We provided a draft of this report to you on October 20, 1995. Because this report contains no findings or recommendations, comments were not required, and none were received. Therefore, we are publishing this report in final form.

---

[2]Open bid sample competition is the process the Marine Corps will employ in selecting a TETS vender. It includes the submission of bids by all interested parties, selection of the most promising bids (three to five), and submission of actual prototypes for testing before a contract is awarded.

We appreciate the courtesies extended to the audit staff. For additional information on this report, please contact Mr. John A. Gannon, Audit Program Director, at (703) 604-9427 (DSN 664-9427) or Mr. Stephen T. Hampton, Acting Audit Project Manager, at (703) 604-9428 (DSN 664-9428). Enclosure 7 lists the distribution of this report. The audit team members are listed on the inside back cover.

David K. Steensma

David K. Steensma
Deputy Assistant Inspector General
for Auditing

Enclosures

Glossary

Automated test support unit prototype. The automated test support unit was one of the alternative automatic test systems considered in the TETS COEA. It was developed to show the viability of a commercial-off-the-shelf solution for TETS; and successfully used in the TETS concept demonstration held in September 1992. The prototype consisted of integrated commercial-off-the-shelf equipment with Government developed equipment interfaces and test software. It used industry standard, which allowed for communication among devices, ease of programming integration, and physical size and software cost reduction through the use of a common interface. The automated test support unit prototype allowed interfacing of components manufactured by multiple vendors.

Automatic test equipment. Automatic test equipment consists of an operating system or executive software, which runs on a main computer, and a range of hardware components. Components of automatic test equipment hardware are a main computer within the test equipment, an operating system, measurement and stimulus instruments, a signal control and switches, and needed interfaces such as heating and cooling sources and structural supports.

Automatic test system. An automatic test system is comprised of automatic test equipment hardware, operating software, and test program sets that are needed to test individual weapon system electronics. It is used in DoD field and depot electronics maintenance organizations to test electronics equipment that would be difficult or impossible to test manually.

Base case. The base case, as referred to in the TETS COEA, represents the status quo and consists of the test equipment that is performing the Marine Corps automatic test functions. It is first generation electronics technology and is old, difficult to maintain, and it takes too long to perform diagnostic tasks.

Commercial-off-the-shelf. Equipment that can be purchased through commercial retail or wholesale distributors.

Consolidated automated support system. CASS is an alternative system considered in the TETS COEA. The Navy's CASS is general purpose, standardized automatic test equipment composed of six electronic configurations. The automatic test equipment is structured around a common core with computer-assisted, multifunctional capabilities to support testing of aircraft subsystems and missiles. The CASS program features fleet-wide standardization of hardware and software elements that is designed to enhance electronic test capability at the intermediate and depot maintenance levels. CASS is one of the designated families under DoD automatic test system policy.

Direct support electrical system test set, general purpose interface assembly. This system, developed by Pentastar Electronics, Incorporated, was considered in the TETS COEA. It is a small, rugged automated test unit that can be transported forward in tactical vehicles to support units engaged in

combat operations. It supports the M1 Abrams Tank and M2/M3 Bradley Fighting Vehicles. It is constructed of proprietary components and uses a Pentastar proprietary operating system.

Integrated family of test equipment base shop test facility. The IFTE base shop test facility is an alternative automatic test system considered in the TETS COEA. IFTE is composed of five subsystems of automatic test equipment. The Army initiated the IFTE to minimize unique automatic test equipment that it was procuring for weapon systems. The primary intermediate maintenance level subsystem of IFTE is the base shop test facility, which is installed in an S-280 shelter and mounted on a 5-ton truck for Army use. It is general purpose, multifunctional automatic test equipment that uses several configurations of tests to diagnose electronic faults or failures in weapon systems. IFTE is one of the designated families under DoD automatic test system policy.

Modified commercial-off-the-shelf equipment. Modified commercial-off-the-shelf equipment is equipment that has been customized to meet functional requirements.

Nondevelopmental item equipment. Nondevelopmental item equipment is equipment that can be commercial-off-the-shelf, ruggedized or militarized. It is defined as:

o an item of supply that is available in the commercial marketplace.

o a previously developed item of supply that is in use by a department or agency of the United States, a state or local Government, or a foreign Government with which the United States has a mutual defense cooperation agreement.

o an item that requires only minor modification to meet the procuring agency's requirements.

o an item being produced that does not meet other nondevelopmental item requirements solely because it is not yet in use, or not yet available in the commercial market place.

Third echelon test set. The TETS is a portable automatic test capability to be used by the Marine Corps at or near the forward edge of the battlefield area. It will consist of 237 base configurations. Of its 237 configurations, 165 will include a radio frequency test capability and 41 will include an electro-optical test capability.

Third Echelon Test Set Operational Concept

Third Echelon Maintenance. The Marine Corps authorizes specially trained personnel to perform third echelon maintenance at or near the forward edge of the battlefield area. It includes diagnosis, isolation, and repair of equipment components. The following figure illustrates the TETS operational concept. (CCA is a circuit card assembly)

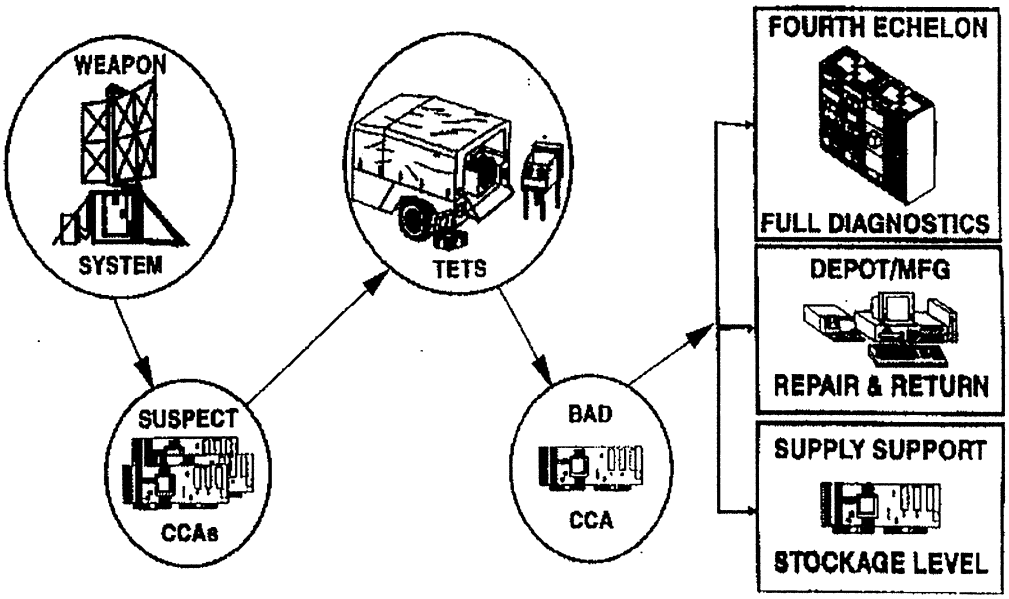

Third Echelon Test Set History

The following is a chronological list of significant events that occurred during the TETS program.

TETS Concept Demonstration, September 1992. The Marine Corps Automated Test Support Business Center, Albany, Georgia, developed a prototype system constructed from commercial-off-the-shelf equipment for verification and proof of concept. (The prototype was referred to as the automated test support unit prototype.) The prototype system successfully demonstrated a commercial off-the-shelf solution capable of performing all requirements of a third echelon automatic tester. The results of the TETS concept demonstration prompted the Commander, Marine Corps Systems Command, to establish TETS as a program.

TETS COEA, January 1994. The Marine Corps conducted a COEA to determine the most cost-effective solution to support all Marine Corps programs that require automatic test equipment. Based on the results of the COEA, Marine Corps decisionmakers determined that an automatic test system based on the automated test support unit prototype provided the most affordable, operationally effective, and reliable approach.

Automatic Test System Investment Strategy, January 1994. In response to congressional direction to establish automatic test system commonality, the Office of the Secretary of Defense tasked the Institute for Defense Analyses to conduct a study and develop an investment strategy for DoD automatic test systems. The study concluded that implementing an investment strategy that uses designated DoD standard automatic test system families, instead of weapon system unique automatic test systems, should reduce acquisition cost. The report stated that CASS and IFTE could satisfy 95 percent of the technical test requirements.

Automatic Test System Policy, April 1994. The Deputy Under Secretary of Defense for Acquisition and Technology issued a policy memorandum on automatic test systems. It was established to minimize the number of unique automatic test systems being introduced into DoD field, depot, and manufacturing operations, and to encourage use of commercial-off-the-shelf testers and components thereby reducing the logistics burdens and long-term costs to DoD. The policy required DoD Components to satisfy all acquisition needs for automatic test systems by either using designated automatic test system families or obtaining a waiver. The Navy's CASS and the Army's IFTE were designated as the initial DoD families. Enclosure 4 discusses additional issues concerning automatic test system policy.

TETS Waiver Request, Fall 1994. The TETS program was presented to the automatic test system management board in the fall of 1994, for waiver recommendation. The management board reviewed the prototype and requested that concept studies be conducted on the CASS and IFTE programs to determine the feasibility of a satisfactory variant to satisfy the TETS requirements.

Concept Studies for CASS and IFTE, March 1995. Based on the October 31, 1994, operational requirements document, the automatic test system management board asked members of both the CASS and IFTE programs to study the feasibility of a satisfactory variant to satisfy TETS requirements. The CASS and IFTE concept studies concluded that neither CASS nor IFTE could satisfy the power, reconfigurability and portability, size, and weight requirements of TETS.

Automatic Test System Waiver, May 1995. The automatic test system management board granted a waiver for TETS, allowing Marine Corps Systems Command to procure an automatic test system that can satisfy the TETS requirements through open bid sample competition. The management board will review the program again if any changes are made to the current acquisition strategy or schedule.

Milestone I/II, May 1995. A combined milestone I, concept demonstration, approval and milestone II, development, approval for TETS, was held on May 11, 1995. The Milestone Decision Authority considered the results of the TETS COEA, the CASS and IFTE concept studies, and the automatic test system management boards waiver approval among the various other required milestone documentation for TETS. Greater emphasis was placed on the management board's recommendations than on the information provided by the COEA. As a result of the milestone I/II review, the TETS program was authorized to enter into the next phase of the acquisition process, specifically phase II, Engineering and Manufacturing Development.

Other Matters of Interest

Automatic Test System Policy. Existing automatic test system standard families, CASS and IFTE, do not adequately address the downsized automatic test system requirement like the TETS program. DoD officials, responsible for program oversight on automatic test system policy, expressed concern over the potential for duplicative investments in downsized automatic test system within and across weapon programs and depots. The Marine Corps TETS, the Air Force special operating forces radio frequency mobile electronic test set, and the Air Force's F-15 downsized tester are examples of downsized automatic test system applications. To address those concerns, the Office of the Deputy Under Secretary of Defense for Acquisition and Technology clarified existing DoD policy for automatic test systems that will be published in January 1996. This clarification was driven by significant changes in DoD acquisition management processes, specifically the Integrated Product and Process Development approach. To adequately address downsized automatic test system requirements, this policy should include sufficient measures to ensure that automatic testers are acquired on a standard family basis and duplication is avoided. An interim progress report on the proposed implementation of the Integrated Product and Process Development approach is tentatively scheduled for February 1996 and a final report is expected in March 1996.

Improving the COEA Process. The Office of the Assistant Secretary of Defense for Program Analysis and Evaluation has recognized the need to improve the COEA process. Personnel from Program Analysis and Evaluation performed a review to examine the usefulness of COEAs in the acquisition process, the level of effort required to produce a COEA, how COEAs should be conducted, who should perform COEAs and the timing and scope of COEAs. During the review, Program Analysis and Evaluation personnel contacted the Institute for Defense Analyses, the Center for Naval Analyses, and staffs and program offices of the Services. They completed their review of the COEA process in July 1995. Program Analysis and Evaluation personnel made initial recommendations to improve the COEA process. No official action had been taken as of November 28, 1995.

Prior Audits and Other Reviews

Inspector General, DoD, Reports

Inspector General, DoD (IG, DoD), Report No. 95-024, "Automatic Test Systems Acquisition," was issued on November 4, 1994. The report discusses efforts to achieve commonality in standards among the Military Departments as part of the DoD Policy for automatic test systems. On April 29, 1994, the Deputy Under Secretary of Defense for Acquisition and Technology issued a DoD policy memorandum to improve the automatic test system acquisition process. The intent of the automatic test system policy is to minimize unique types of automatic test systems being introduced into DoD field, depot, and manufacturing operations and to encourage the use of commercial-off-the-shelf testers and components throughout DoD. Execution of the policy will reduce logistics burdens and long-term costs to DoD. In addition, the automatic test system Executive Agent Office prepared a draft directive for the DoD automatic test system acquisition program and DoD Instruction 5000.2 language changes to provide guidance for the implementation of automatic test system policy. The actions taken by management were considered responsive and the report contained no recommendations. As of December 1995, the draft directive and instruction were being coordinated.

The IG, DoD, Report No. 93-138, "Quick-Reaction Report on the Acquisition of the F-15 Downsized Tester," was issued on June 30, 1993. The audit was requested because the Air Force was not developing a family of standardized automatic test equipment or using existing DoD families of automatic test equipment that met multiple weapon system and Military Department test requirements. The report states that the Air Force's development and acquisition of unique automatic test equipment to replace existing F-15 avionics automatic test equipment was not cost-effective. The report recommended that the Air Force discontinue acquisition of unique automatic test equipment to replace existing F-15 avionics automatic test equipment and prepare thorough analyses of costs and technical requirements for standardized automatic test equipment. The report also recommended that the Under Secretary of Defense for Acquisition and Technology and the Air Force implement policies and procedures for standardized automatic test equipment. The Air Force nonconcurred with the recommendation to discontinue acquisition of unique automatic test equipment and to prepare the analyses. The Air Force stated that discontinuing the acquisition would result in monetary losses, that an operational requirements document was approved by the Air Force Vice Chief of Staff, and that a COEA was not required. The then Assistant Secretary of Defense (Production and Logistics) and the Air Force agreed to implement policies and procedures for standardizing automatic test equipment. The Under Secretary of Defense for Acquisition and Technology directed his staff to circulate for coordination proposed acquisition policy language on automatic test systems. In the interim, his staff reviewed automatic test system acquisitions

against the objective of procuring standardized inventory automatic test equipment. On April 29, 1994, the Under Secretary of Defense for Acquisition and Technology issued a DoD policy memorandum for automatic test systems.

The IG, DoD, Report No. 92-095, "Acquisition and Management of Maintenance and Diagnostic Automatic Test Equipment," was issued on May 21, 1992. As a part of a DoD-wide audit of the acquisition and management of maintenance and diagnostic automatic test equipment, the audit evaluated the effectiveness of DoD-wide guidance and procedures for monitoring the acquisition and management of maintenance and diagnostic automatic test equipment by the Military Departments. The report recommended that comprehensive and uniform DoD-wide policy and guidance on the acquisition and management of maintenance and diagnostic automatic test equipment be developed and implemented and that the Office of the Secretary of Defense establish oversight responsibilities. Management agreed on a need for uniform and comprehensive DoD-wide policy guidelines on the acquisition of automatic test equipment and the need to clarify Office of the Secretary of Defense management responsibilities. An automatic test system study was completed and an investment strategy that capitalizes on existing automatic test system investments was developed. The investment strategy was documented in a summary report that recommended management changes, acquisition policy changes, and next generation technology investments to verify implementation and long-term viability of the strategy. On April 29, 1994, the Under Secretary of Defense for Acquisition and Technology issued a DoD policy memorandum for automatic test systems.

The IG, DoD, Report No. 92-037, "Effectiveness of the Air Force's Internal Controls Over the Development and Acquisition of Maintenance and Diagnostic Systems," was issued on January 23, 1992. As part of a DoD-wide audit of the development and acquisition of DoD maintenance and diagnostic systems, the audit evaluated the effectiveness of the Air Force's principal program for monitoring the development and acquisition of maintenance and diagnostic systems, the modular automatic test equipment program. The report states that the Air Force Systems Command product divisions and the Air Force Logistics Command logistics centers were not complying with Air Force guidance for acquiring standardized automatic test equipment. As a result, the Air Force experienced a continued proliferation of equipment and provided no assurance of acquiring automatic test equipment cost-effectively. The report recommended that the Air Force develop and implement an effective internal control management system for monitoring the development and acquisition of automatic test equipment. The Air Force concurred with the report and accordingly issued Air Force Policy Directive 63-2, "Automatic Test Systems and Equipment," July 19, 1994.

The IG, DoD, Report No. 92-022, "Development and Acquisition of DoD Maintenance and Diagnostic Systems-Navy," was issued on December 17, 1991. The report states that the Navy's plans for transitional to standard automatic test equipment developed under its CASS Program have not been fully effective. As a result, potential savings opportunities have been missed because several Navy organizations did not perform work load and economic analyses to determine whether it was feasible and economical to transition from

existing test equipment for their weapon systems to CASS test equipment. The report recommended that the Navy develop an effective internal control management system to monitor the Navy-wide development, acquisition, and distribution of test, measurement, and diagnostic equipment. In response to the report, the Navy nonconcurred with the finding and all recommendations. However, as a result of mediation, the Navy agreed to use a modified Naval Air Systems Command strategy for the transition to automatic test equipment.

Other Prior Reviews

The Institute for Defense Analyses, Paper No. P-2917, "Investment Strategy for DoD Automatic Test Systems," was issued in January 1994. In response to congressional direction to establish automatic test system commonality, the Office of the Secretary of Defense tasked the Institute for Defense Analyses to conduct a study and develop an investment strategy for DoD automatic test systems. The study states that implementing an investment strategy that uses designated DoD-standard automatic test system families, instead of weapon system-unique automatic test systems, should reduce acquisition cost. The report concluded that CASS and IFTE could satisfy 95 percent of DoD automatic testing requirements.

The Program Manager, Ground Weapons Marine Corps Systems Command, issued "Test, Measurement and Diagnostic Equipment Study," on December 22, 1992. The study was commissioned to provide information on the available test, measurement, and diagnostic equipment that may be used to test all systems either fielded or planned for which the Program Manager, Ground Weapons is responsible for. The study compares the costs associated with the IFTE, the direct support test set, the advanced TOW 2 field test set, and the automated test equipment program proposed by the Marine Corps Systems Command. The study recommended that the Program Manager, Ground Weapons adopt a singular suite of test equipment, the direct support test set.

Organizations Visited or Contacted

Office of the Secretary of Defense

Assistant Secretary of Defense, Economic Security, Washington, DC
Assistant Secretary of Defense, Program Analysis and Evaluation, Washington, DC

Department of the Army

U.S. Army Test, Measurement and Diagnostic Equipment Activity, Huntsville, AL

Department of the Navy

Naval Air Systems Command Headquarters, Director, Automatic Test Systems Executive Agent Office, Arlington, VA
Naval Air Systems Command Headquarters, Consolidated Automated Support System Program Office, Arlington, VA
Naval Air Warfare Center, Lakehurst, NJ
Marine Corps Combat Development Command, Quantico, VA
Marine Corps Systems Command, Quantico, VA
Marine Corps Automatic Test Business Center, Albany, GA

Non-Government Organizations

GDE Systems Incorporated, San Diego, CA
GEC-Marconi Avionics Incorporated, Atlanta, GA
Harris Corporation, Melbourne, FL
Hewlett Packard Company, Rockville, MD
Institute for Defense Analyses, Arlington, VA
JB Systems Engineering Support Company, Huntsville, AL
Lockheed Martin, Orlando, FL
National Instruments, Austin, TX
Pentastar Electronics Incorporated, Huntsville, AL
Racal Instruments, Irvine, CA
Tektronix Incorporated, Atlanta, GA

Report Distribution

Office of the Secretary of Defense

Under Secretary of Defense for Acquisition and Technology
  Director, Defense Logistics Studies Information Exchange
  Deputy Assistant Secretary of Defense, Industrial Affairs
Under Secretary of Defense (Comptroller)
  Deputy Chief Financial Officer
  Deputy Comptroller (Program/Budget)
Deputy Under Secretary of Defense (Logistics)
Assistant to the Secretary of Defense (Public Affairs)

Department of the Army

Auditor General, Department of the Army

Department of the Navy

Assistant Secretary of the Navy (Financial Management and Comptroller)
Auditor General, Department of the Navy
Commandant of the Marine Corps
Commander, Marine Corps Combat Development Command
Commander, Marine Corps Systems Command

Department of the Air Force

Assistant Secretary of the Air Force (Financial Management and Comptroller)
Auditor General, Department of the Air Force

Other Defense Organizations

Director, Defense Contract Audit Agency
Director, Defense Logistics Agency
Director, National Security Agency
  Inspector General, National Security Agency

Non-Defense Federal Organizations and Individuals

Office of Management and Budget
National Security and International Affairs Division, General Accounting Office
  Technical Information Center

Non-Defense Federal Organizations and Individuals (cont'd)

Defense and National Aeronautics and Space Administration Issues
Military Operations and Capabilities Issues
Chairman and ranking minority member of each of the following congressional committees and subcommittees:
Senate Committee on Appropriations
Senate Subcommittee on Defense, Committee on Appropriations
Senate Committee on Armed Services
Senate Committee on Governmental Affairs
House Committee on Appropriations
House Subcommittee on National Security, Committee on Appropriations
House Committee on Government Reform and Oversight
House Subcommittee on National Security, International Affairs, and Criminal Justice, Committee on Government Reform and Oversight
House Committee on National Security
Honorable Howell Heflin, U.S. Senate

Audit Team Members

This report was prepared by the Logistics Support Directorate, Office of the Assistant Inspector General for Auditing, DoD.

Shelton R. Young
John A. Gannon
Stephen T. Hampton
Timothy J. Harris
Chandra P. Sankhla
Jamie A. Bobbio