Audit Report

OFFICE OF THE INSPECTOR GENERAL

ACQUISITION OF THE SENSOR FUZED WEAPON

Report No. 95-271 June 30, 1995

This special version of the report has been revised to omit contractor proprietary data.

Department of Defense

Additional Copies

To obtain additional copies of this report, contact the Secondary Reports Distribution Unit, Audit Planning and Technical Support Directorate, at (703) 604-8987 (DSN 664-8987) or FAX (703) 604-8932.

Suggestions for Future Audits

To suggest ideas for or to request future audits, contact the Planning and Coordination Branch, Audit Planning and Technical Support Directorate, at (703) 604-8939 (DSN 664-8939) or FAX (703) 604-8932. Ideas and requests can also be mailed to:

Inspector General, Department of Defense
OAIG-AUD (ATTN: APTS Audit Suggestions)
400 Army Navy Drive (Room 801)
Arlington, Virginia 22202-2884

DoD Hotline

To report fraud, waste, or abuse, contact the DoD Hotline by calling (800) 424-9098; by sending an electronic message to Hotline@DODIG.OSD.MIL; or by writing the DoD Hotline, The Pentagon, Washington, D.C. 20301-1900. The identity of writers and callers is fully protected.

Acronyms

APB	Acquisition Program Baseline
ASR	Acquisition Strategy Report
BLU	Bomb, Live Unit
CBU	Cluster Bomb Unit
COEA	Cost and Operational Effectiveness Analysis
IOT&E	Initial Operational Test and Evaluation
LRIP	Low-Rate Initial Production
NCAA	Nonnuclear Consumables Annual Analysis
PEP	Product Enhancement Program
ORD	Operational Requirements Document
RCM	Requirements Correlation Matrix
SAR	Selected Acquisition Report
SDV	Submunition Delivery Vehicle
SFW	Sensor Fuzed Weapon
TMD	Tactical Munitions Dispenser
VV&A	Verification, Validation, and Accreditation
WCMD	Wind Corrected Munitions Dispenser

INSPECTOR GENERAL
DEPARTMENT OF DEFENSE
400 ARMY NAVY DRIVE
ARLINGTON, VIRGINIA 22202-2884

June 30, 1995

MEMORANDUM FOR UNDER SECRETARY OF DEFENSE FOR ACQUISITION AND TECHNOLOGY
ASSISTANT SECRETARY OF THE AIR FORCE (FINANCIAL MANAGEMENT AND COMPTROLLER)

SUBJECT: Audit Report on the Acquisition of the Sensor Fuzed Weapon (Report No. 95-271)

We are providing this final report for your review and comments. Comments on a draft of this report were considered in preparing the final report.

DoD Directive 7650.3 requires that all recommendations be resolved promptly. As a result of management comments, we deleted draft Recommendation D.1. because the system is not fielded and redirected Recommendation B.3. (draft Recommendation B.3.a.) to the Assistant Secretary of the Air Force for Acquisition because of oversight cognizance. We request that the Air Force provide comments on redirected Recommendation B.3. Final comments on the unresolved recommendations must be provided by August 30, 1995. See the "Management Comments Required" section at the end of the findings for recommendations you must comment on and the specific requirements for your comments. Recommendations are subject to resolution in accordance with DoD Directive 7650.3 in the event of nonconcurrence or failure to comment.

We appreciate the courtesies extended to our audit staff. Questions on the audit should be directed to Mr. Robert West, Audit Program Director, at (703) 604-8983 or Mr. Michael Claypool, Audit Project Manager, at (703) 604-9007. See Appendix N for the report distribution. The audit team members are listed inside the back cover.

David K. Steensma

David K. Steesma
Deputy Assistant Inspector General
for Auditing

This special version of the report has been revised to omit contractor proprietary data.

Office of the Inspector General, DoD

Report No. 95-271 **June 30, 1995**
(Project No. 4AS-0047)

ACQUISITION OF THE SENSOR FUZED WEAPON

EXECUTIVE SUMMARY

Introduction. The Sensor Fuzed Weapon (SFW) is a 1,000-pound class, unpowered, unguided, gravity-drop, wide-area munition. The SFW is currently in low-rate initial production. In May 1994, when we initiated the audit, the program was scheduled to be reviewed by the Defense Acquisition Board in December 1995 for a decision concerning full-rate production. The decision was subsequently delegated to the Air Force. The development and production costs for SFW were estimated at $1.25 billion for 5,000 units.

Objectives. The audit objective was to evaluate the effectiveness of the SFW acquisition management to decide whether the weapon was being cost-effectively prepared for production and deployment. We reviewed requirements' evolution and affordability, acquisition planning and risk management, engineering and manufacturing, logistics and other infrastructure, test and evaluation, contract performance measurement, contracting, and management controls related to these objectives.

Audit Results. Overall, the Air Force was effectively managing the SFW program to reduce program risk during the transition from development to full-rate production. Four conditions warranting management action were identified during the audit.

o The SFW program has not performed a comprehensive component breakout review since 1991 to support the procurement acquisition strategy. As a result, the Air Force may miss an opportunity to reduce procurement costs an estimated $77 million over the Future Years Defense Program (FYs 1996 through 2001) (Finding A).

o The SFW Acquisition Program Baseline key performance parameters were inconsistent with the Requirements Correlation Matrix. As a result, the Air Force operational flight tests used primarily low-level delivery tactics to evaluate the effectiveness of multiple kills per aircraft pass and did not validate the Acquisition Program Baseline's multiple kills requirement across the delivery envelope. The Selected Acquisition Report to Congress is inconsistent because the Acquisition Program Baseline delivery parameters as reported in the Selected Acquisition Report does not include the same parameters cited in the Requirements Correlation Matrix (Finding B).

o The SFW Cost and Operational Effectiveness Analysis, November 1991, did not provide adequate decisionmaking information because the analysis factors changed significantly. As a result, the Air Force may not make a fully informed decision for the full-rate production in December 1995 (Finding C).

o The quality of the Air Force acquisition objectives for SFW munitions can be improved. As a result, the inventory requirements may not be accurately calculated and the modeling errors may affect the SFW acquisition inventory objectives (Finding D).

The potential benefits of the audit include better use of $77 million over the Future Years Defense Program from component breakout. The potential benefits of recalculating inventory requirements cannot be determined at this time. However, implementing the recommendations will result in more realistic quantitative requirements. Implementation of the other recommendations will ensure compliance with DoD and Air Force regulations and provide more timely and correct information to DoD decisionmakers (Appendix L).

Summary of Recommendations. We recommend that the Air Force complete a component breakout plan for the SFW program to support the FY 1996 full-rate production and break out those components that will result in net savings; revise key program documentation to apply the same delivery envelope performance characteristics for multiple kills at low- to high-altitude release regimes; revise the SFW Selected Acquisition Report, December 31, 1994, and submit a quarterly update to ensure Congress is being accurately informed on the program's status; update the SFW Cost and Operational Effectiveness Analysis to incorporate changes in operational concepts, available alternatives, and costs; and correct the Nonnuclear Consumables Annual Analysis process and recalculate the SFW inventory requirements. We also recommend that the Under Secretary of Defense for Acquisition and Technology review the revision to the December 31, 1994, Selected Acquisition Report to ensure that Congress is provided accurate information on the program's status.

Management Comments. The Air Force agreed to conduct a component breakout analysis to support the Milestone III review and break out those components that will result in cost savings to the Government; to revise the Acquisition Program Baseline key performance parameters; to review the Cost and Operational Effectiveness Analysis; to use kill effectiveness data represented by operational test results; to verify, validate, and accredit the Heavy Attack model; and to verify SABSEL model input.

The Under Secretary of Defense for Acquisition and Technology did not agree that the Selected Acquisition Report, December 31, 1994, needed to be updated. The Air Force did not agree to revise the Operational Requirements Document and the attached Requirements Correlation Matrix to include specific kill requirements within the delivery envelope release altitudes; to update the Selected Acquisition Report, December 31, 1994; and to include catastrophic kills in Nonnuclear Consumables Annual Analysis modeling and recalculate the SFW inventory requirements before the next Program Objective Memorandum cycle. The Air Force stated that Congress is fully aware of any SFW problems through briefings and congressional testimony. Part II contains a discussion of management's comments to the report. Part IV contains the complete texts of management comments.

Audit Response. In response to the Under Secretary of Defense for Acquisition and Technology comments, we deleted one recommendation because the SFW is not fielded and redirected one recommendation to the Air Force due to the delegation of the full-rate production decision to the Air Force. We request that the Air Force provide comments on the redirected recommendation. In response to the final report, we request that the Under Secretary of Defense for Acquisition and Technology reconsider his position on updating the Selected Acquisition Report, December 31, 1994. We also request that the Air Force reconsider our recommendation to revise the Operational Requirements Document delivery parameters to agree with the Requirements Correlation Matrix; to update the Selected Acquisition Report, December 31, 1994; and to include catastrophic kills in inventory modeling analysis. We request the Under Secretary of Defense for Acquisition and Technology and the Air Force provide comments by August 30, 1995.

Table of Contents

Executive Summary i

Part I - Introduction

Background 2
Objectives 3
Scope and Methodology 3
Management Controls 4
Prior Audits and Other Reviews 4

Part II - Findings and Recommendations

Finding A. Component Breakout 6
Finding B. Operational Requirements 11
Finding C. Cost and Operational Effectiveness Analysis 22
Finding D. Inventory Requirements 27

Part III - Additional Information

Appendix A. Description of Sensor Fuzed Weapon Subsystems 36
Appendix B. Sensor Fuzed Weapon Deployment Sequence 38
Appendix C. Product Enhancement Program 39
Appendix D. Areas Not Requiring Further Review 41
Appendix E. Prior Audits and Other Reviews 43
Appendix F. Candidates for Component Breakout 45
Appendix G. Potential Monetary Benefits From Component Breakout 49
Appendix H. Approved Performance Characteristics 50
Appendix I. Wind Corrected Munitions Dispenser 53
Appendix J. Initial Operational Tests 55
Appendix K. Analysis of Changes in Cost and Operational Effectiveness Analysis Concepts 56
Appendix L. Summary of Potential Benefits Resulting From Audit 61
Appendix M. Organizations Visited or Contacted 65
Appendix N. Report Distribution 67

Part IV - Management Comments

Office of the Under Secretary of Defense Comments 70
Department of the Air Force Comments 74

Part I - Introduction

Background

The Sensor Fuzed Weapon (SFW) Cluster Bomb Unit (CBU)-97/B is a 1,000-pound class, unpowered, unguided, gravity-drop, wide-area munition. The SFW consists of one SUU-66/B Tactical Munitions Dispenser (TMD), 10 Bomb, Live Unit (BLU)-108/B submunitions packaged within the TMD, and 4 infrared heat-seeking projectiles packaged within one BLU-108/B (4 projectiles for each submunition for a total of 40 projectiles per TMD). Each projectile can independently detect targets and fire a high-explosive warhead that is designed to penetrate armored targets and achieve a mobility, firepower, or catastrophic kill. The subsystems and their functions are described in Appendix A and the SFW's deployment sequence is illustrated in Appendix B.

In June 1989, the SFW Engineering and Manufacturing Development program was restructured due to test failures, schedule delays, and budget changes. The restructure included a production transition program to reduce the cost and the risk of transitioning to production and to provide additional program funds for hardware testing. In December 1991, the initial operational test and evaluation (IOT&E) phase 1 was successfully completed; the results supported the Defense Acquisition Board's decision for low-rate initial production (LRIP).

On March 16, 1992, the Defense Acquisition Board directed a 4-year LRIP procurement program. The Defense Acquisition Board also directed incorporation of a producibility enhancement program to reduce the number of parts and production costs for the full-rate production configuration. After the Defense Acquisition Board decision for LRIP, the FY 1994 President's Budget reduced the procurement quantities from 10,000 to 5,000 units with program costs of $1.75 billion for the 5,000 units. Budget constraints had previously reduced the quantity of SFWs from 16,928 to 10,000 units.

The Area Attack Systems Program Office, Eglin Air Force Base, Florida, manages the SFW program. In May 1988, the SFW was designated a DoD major acquisition program category I and came under the Defense Acquisition Board for program review and oversight. In November 1994, the Under Secretary of Defense for Acquisition and Technology memorandum, "Sensor Fuzed Weapon (SFW) Acquisition Strategy Report (ASR)," delegated the full-rate production decision to the Assistant Secretary of the Air Force for Acquisition. The full-rate production decision is scheduled for December 1995.

Textron Defense Systems (Textron) is the prime contractor for the SFW. The SFW Program Office has awarded production contracts for LRIP phases 1 through 4 for $330.2 million to purchase 492 SFWs and 54 SEEK EAGLE test units, which the Air Force uses for aircraft certification for carrying munitions. The LRIP contracts were also amended to include product enhancement program design changes and associated contractor testing as described in Appendix C.

The IOT&E phase 2 tests are scheduled from February through September 1995 and the test results will support the Milestone III decision for full-rate

production scheduled for December 1995. Follow-on operational test and evaluation is scheduled to start in April 1996 for an operational assessment of Air Combat Command tactics.

Objectives

The audit objective was to evaluate the effectiveness of the SFW acquisition management to determine whether the SFW was being cost-effectively prepared for production and deployment. We followed our critical program management element approach for the audit. The objectives and scope of the audit were tailored to the status of the SFW in the low-rate initial production phase of the acquisition process. We reviewed requirements' evolution and affordability, acquisition planning and risk management, engineering and manufacturing, logistics and other infrastructure, test and evaluation, contract performance measurement, contracting, and management controls related to these objectives.

We also followed up on the Under Secretary of Defense for Acquisition and Technology's and the Air Force's implementation of recommendations in three reports: General Accounting Office Report No. NSIAD-91-235 (OSD Case No. 8718), "Munition Procurement, Resolve Questions Before Proceeding With Sensor Fuzed Weapon Production," August 16, 1991, and Office of the Inspector General, DoD, Reports No. 92-050, "Review of the Sensor Fuzed Weapon as a Part of the Audit of Effectiveness of the Defense Acquisition Board Review Process--FY 1992," February 18, 1992; and No. 90-072, "Final Report on the Audit of the Acquisition of the Sensor Fuzed Weapon," May 23, 1990.

We determined that the following areas did not warrant additional audit work: engineering and manufacturing, logistics and other infrastructure, contract performance measurement, contracting, and test and evaluation, which are described in Appendix D. Also, the Under Secretary of Defense for Acquisition and Technology and the Air Force initiated satisfactory action for the recommendations the General Accounting Office and Inspector General, DoD, made in those SFW audit reports.

Part II discusses findings and recommendations pertaining to program requirements, operations requirements documentation, program affordability, and acquisition planning and risk management.

Scope and Methodology

We conducted this program results audit from May 1994 through January 1995 in accordance with auditing standards issued by the Comptroller General of the United States, as implemented by the Inspector General, DoD, and included such tests of management controls as were deemed necessary. We reviewed

data dated from January 1988 through January 1995 to accomplish our audit objectives. Data reviewed included acquisition strategies and plans, system operating requirements, contracts, cost data, logistics support plans, life-cycle cost estimates, budgetary data, a test and evaluation master plan, procurement data, and property records. We reviewed three contracts for LRIP phases 1 through 3 that have a total current contract value of $216 million.

We used computer-processed data in the Nonnuclear Consumables Annual Analysis (NCAA) for FYs 1994 through 2001 and FYs 1995 through 2002 to evaluate the accuracy of the information used for the NCAA quantitative requirements for the SFW. However, the audit did not evaluate the accuracy of the FYs 1994 through 2001 and FYs 1995 through 2002 NCAA conclusions regarding the number of SFW units required to defeat the threat because the weapon effectiveness data used for the SFW were determined to be erroneous. The lack of evaluation will not affect Finding D, which addressed the probable effects of the error rather than a specific quantitative SFW requirement. The Quantitative Methods Division of the Office of the Assistant Inspector General for Auditing assisted in our review of the Air Force NCAA process. The organizations visited or contacted are in Appendix M.

Management Controls

We evaluated management controls applicable to the critical program management elements of the SFW program and found the management controls to be adequate. In assessing the management controls, we evaluated management control techniques, such as management plans and procedures, vulnerability assessments, written policies and procedures, and management-initiated reviews. No material management control deficiencies were identified as defined by DoD Directive 5010.38, "Internal Management Control Program," April 14, 1987. In accordance with the DoD management control program, the Area Attack Systems Program Office was the subject of a vulnerability assessment and an evaluation of the internal accounting and administrative control system for the fiscal year ending September 30, 1994. No material weaknesses were disclosed. The vulnerability assessment was adequate to evaluate management controls for the SFW program.

Prior Audits and Other Reviews

Since January 1990, the SFW program has been the subject of four audits that were related to our audit objectives. Summaries of these audits are in Appendix E.

Part II - Findings and Recommendations

Finding A. Component Breakout

The SFW Project Office has not performed a comprehensive component breakout review to support the procurement acquisition strategy since May 1991. The SFW Project Office did not perform an updated component breakout review because the production risk factors of component breakout were considered unacceptable. As a result, the Air Force may miss an opportunity to put to better use an estimated $77 million over the Future Years Defense Program (FYs 1996 through 2001).

Background

Component breakout is the process whereby the Government purchases components directly from the component manufacturer, eliminating the prime contractor's overhead and profit, thus achieving savings for the Government. On August 9, 1990, the Deputy Secretary of Defense memorandum, "Component Breakout in System Acquisition," directed the Secretaries of the Military Departments to direct program managers to complete component breakout reviews in acquisition strategies to eliminate unnecessary costs and to ensure that program managers have the resources and expertise to perform adequate component breakout analyses.

DoD Instruction 5000.2, "Defense Acquisition Management Policies and Procedures," Part 5, Section A, February 1993, and DoD Manual 5000.2-M, "Defense Acquisition Management Documentation and Reports," Part 4, Section D, March 1993, require that component breakout be considered on every program. The Acquisition Strategy Report (ASR) discusses the results of component breakout reviews listing the components considered for breakout and providing a brief rationale with supporting analysis justifying the decision not to break out a component.

The Defense Federal Acquisition Regulation Supplement, Appendix D, "Component Breakout," December 1991, states that DoD policy is to break out components if substantial net cost savings will be achieved and the breakout action will not jeopardize the quality, reliability, and performance of the item. The Defense Federal Acquisition Regulation Supplement, Appendix D, further requires program managers to identify potential breakout candidates, to make and document component breakout reviews, and to maintain records of component breakout reviews.

Component Breakout

The SFW Acquisition Plan, May 1991, did not include component breakout as an acquisition strategy for the procurement of the SFW because the Air Force considered the production risk factors of component breakout unacceptable. However, no updated comprehensive component breakout review has been performed to support this decision for full-rate production as required by Defense Federal Acquisition Regulation Supplement and directed by the Deputy Secretary of Defense in August 1990. The SFW Acquisition Strategy Report, March 1994, states that component breakout is not planned for the full-rate production starting in 1996. No detailed analysis or documentation supports this full-rate production decision.

Acquisition Strategy

The SFW program developed an acquisition strategy that identified seven procurement alternatives for LRIP and full-rate production of 16,928 SFWs. The alternatives included a component breakout alternative of providing all components as Government-furnished equipment to a prime integrator. In February 1991, an Acquisition Strategy Panel recommended Textron as the sole-source producer of the SFW but recommended second-source competition at the projectile level. This acquisition strategy was selected as the most cost-effective with an acceptable level of production risk.

After this acquisition decision, the procurement quantity was reduced from 16,928 to 10,000 SFWs primarily because of budget reductions. A follow-up acquisition strategy review held October 4, 1991, endorsed Textron as the sole-source producer for low-rate initial production and full-rate production of the SFW. The follow-up acquisition strategy review concluded that only a sole-source contract was cost-effective for procurement of 10,000 SFWs. This acquisition strategy continued when procurement quantities were reduced to 5,000 SFWs in the FY 1994 President's Budget.

Breakout Considerations

We reviewed five components as potential breakout candidates that meet the Defense Federal Acquisition Regulation Supplement criteria for reliability, design stability, and prime contractor value added. The components selected for review included the CNU-411 A/E shipping and storage container, the TMD, the submunition ejection system, the submunition rocket motor, and the FZU-39/B proximity sensor. Details and figures of these five components are in Appendix F.

Reliability. The CNU-411 A/E shipping and storage container, the TMD, and the FZU-39/B proximity sensor are common use items that have national stock numbers within the Department of Defense supply system and are currently used on two other weapon systems, the Gator and Combined Effects Munition. Government representatives stated that these components have not experienced quality control problems during low-rate initial production.

The submunition ejection system and submunition rocket motor passed production qualification testing. During the production of the LRIP phases 1, 2, and 3 contracts, these components passed all production lot tests. Textron did not report any failures of these components during lot acceptance tests.

Design Stability. Government representatives stated that no design changes affecting the form, fit, or function have been issued for the CNU-411 A/E shipping and storage container, the TMD, and the FZU-39/B proximity sensor. Manufacturers' representatives of the submunition ejection system and submunition rocket motor stated that no design changes have been issued since the components passed production qualification tests.

Prime Contractor Value Added. These five components are manufactured by a subcontractor and delivered to the Load, Assemble, and Pack Facility for final integration. The facility, located in Parsons, Kansas, is managed by the Army Industrial Operations Command and operated by Day and Zimmermann, Incorporated. The facility is responsible for warhead loading, projectile assembly, BLU-108/B submunition assembly, and CBU-97/B munition assembly. Textron has personnel located at the facility; however, the final assembly is the responsibility of Day and Zimmermann, Incorporated. Therefore, any value added by Textron to these five components is limited to subcontractor administration.

Component Breakout Benefits

The Air Force may miss an opportunity to put to better use an estimated $77 million over the Future Years Defense Program (FYs 1996 through 2001) and additional $12 million for the FY 2002 out-year production by purchasing these components through Textron rather than directly from the manufacturer of the component. The $77 million is based upon the *-percent markup Textron applied to the cost of subcontracted components acquired under the LRIP phase 3 contract. Details for the potential cost savings are in Appendix G.

We recognize costs may be incurred for Government contracting and technical personnel support when component breakout occurs. Those costs should be evaluated and compared to the potential benefits received from component breakout.

*Contractor proprietary data deleted.

Recommendations, Management Comments, and Audit Response

A. We recommend that the Director, Area Attack Systems Program Office:

1. Develop a component breakout plan for the Sensor Fuzed Weapon program to support the FY 1996 full-rate production.

Air Force Comments. The Office of the Assistant Secretary of the Air Force (Acquisition) concurred with the recommendation and stated that it would conduct a component breakout review to support the Milestone III review. The complete text of management's comments is in Part IV.

2. Complete a comprehensive component breakout review (to include the shipping and storage container, the tactical munitions dispenser, the submunition ejection system, the submunition rocket motor, and the proximity sensor) to support the Sensor Fuzed Weapon acquisition in accordance with the Defense Federal Acquisition Regulation Supplement, Appendix D, "Component Breakout."

Air Force Comments. The Office of the Assistant Secretary of the Air Force (Acquisition) concurred with the recommendation and stated that it would conduct a component breakout analysis in accordance with the Defense Federal Acquisition Regulation Supplement, Appendix D, "Component Breakout."

Audit Response. We consider the Air Force comments responsive. However, the Air Force did not indicate the date by which the actions will be complete. We ask the Air Force to provide the date in its response to the final report.

3. Break out those components that the breakout review shows will result in net savings to the Government.

Air Force Comments. The Office of the Assistant Secretary of the Air Force (Acqusition) stated that it will break out those components that result in the Air Force having the ability to realize cost savings with acceptable risk.

Audit Response. We consider the Air Force comments to be responsive to the recommendations. In response to the final report, we ask that the Air Force provide an estimated completion date for the planned actions and indicate that it will provide the Office of the Inspector General, DoD, a copy of the Sensor Fuzed Weapon comprehensive breakout review identifying the potential monetary benefits that will be achieved through break out of components.

Management Comments Required

Management is requested to comment on the items indicated with an X in Table 1.

Table 1. Management Comments Required on Finding A.

Recommendation	Organization	Concur/ Nonconcur	Proposed Action	Completion Date	Related Issue
A.1.	Air Force			X	
A.2.	Air Force			X	Monetary Benefits
A.3.	Air Force			X	Monetary Benefits

Finding B. Operational Requirements

The SFW Acquisition Program Baseline key operational performance parameters are inconsistent with the Requirements Correlation Matrix of the Operational Requirements Document. The Acquisition Program Baseline parameters are inconsistent with the Requirements Correlation Matrix that the Air Force uses to evaluate the stated number of multiple kills-per-aircraft pass requirement because the two documents do not include the same delivery envelope parameters. As a result, the Air Force operational flight tests have emphasized primarily low-level delivery tactics to evaluate effectiveness of multiple kills and do not validate the Acquisition Program Baseline multiple kills requirement across the delivery envelope (200 feet through 20,000 feet). Therefore, the Selected Acquisition Report to Congress is misleading because the Acquisition Program Baseline delivery parameters as reported in the Selected Acquisition Report do not include the same parameters cited in the Requirements Correlation Matrix.

Background

Criteria. DoD Instruction 5000.2, "Defense Acquisition Management Policies and Procedures," February 1993, and DoD Manual 5000.2-M, "Defense Acquisition Management Documentation and Reports," March 1993, provide guidance for operational requirements documents and require that a management reporting system be maintained with consistent and reliable data on the status of DoD major acquisition programs.

The Selected Acquisition Report (SAR) is provided annually to Congress to meet statutory requirements of title 10, U.S.C., section 2432, for DoD major Acquisition Category I programs. The SAR summarizes key program costs, schedule, and technical baseline information and program variance analysis relative to the baseline. Data presented in the SAR are DoD Component estimates based upon information derived from test data; technical information; and contractor cost, schedule and performance data.

Operational Requirements Document. Air Force Instruction 10-601, "Mission Needs and Operational Requirements Guidance and Procedures," May 31, 1994, requires that the Operational Requirements Document (ORD) and the Requirements Correlation Matrix, which is a mandatory attachment, be developed and validated by the user Major Command and approved by the Chief of Staff of the Air Force. The Joint Requirements Oversight Council reviews the operational requirements before each milestone review by the Defense Acquisition Board. The Vice Chairman of the Joint Chiefs of Staff chairs the oversight council, with the vice chiefs of the DoD Components as members.

The Requirements Correlation Matrix of the ORD documents how the system will be operated and provides performance objectives and thresholds and

includes the system's measures of effectiveness and the related measures of performance. The key measures of effectiveness and measures of performance are also in the system's Acquisition Program Baseline that the milestone decision authority approves.

Acquisition Program Baseline. The Acquisition Program Baseline (APB) defines the overall acquisition program for a system and contains objectives and minimum acceptable requirements (known as thresholds) for key cost, schedule, and performance parameters. DoD Instruction 5000.2, Section 11-A, states the "*values for APB parameters reflect the cost and performance characteristics of the system as it is expected to be produced and/or fielded*" (emphasis added). The system's program status is measured and reported relative to the APB in the Congressional Selected Acquisition Report and the DoD Defense Acquisition Executive Summary report. See Appendix H for APB operational performance chacteristics for the SFW.

System Operational Requirements Document. The Air Combat Command's System Operational Requirements Document (renamed ORD) for the SFW, revised November 7, 1991, states a need for a conventional munition capable of multiple kills per aircraft pass against operating armored vehicles in a non-countermeasures and countermeasures environment. The kills are categorized as mobility (required), firepower (goal), and catastrophic (goal). The multiple kills are primarily derived from parameters such as the weapon's reliability, vehicle targets, target arrays, delivery envelope, and non-countermeasures and countermeasures environment.

Key Performance Parameters

The Sensor Fuzed Weapon's APB key operational performance parameters are inconsistent with the Requirements Correlation Matrix of the ORD. The APB includes stated delivery envelope parameters from the basic ORD but does not include the different delivery release parameters stated in the Requirements Correlation Matrix the Air Force used to evaluate effectiveness of average multiple kills per aircraft pass. The specific APB operational performance characteristics include the basic ORD parameters but not the Requirements Correlation Matrix delivery envelope parameters, as described in Appendix H.

System Configuration. The SFW system configuration is optimized for a delivery envelope of a low-level altitude, high-speed approach, in either a level or slight dive delivery on a F-16 aircraft that carries four SFWs. The SFW procurement contract configuration specification requires a single baseline aircraft delivery condition (altitude level at 200 feet and 500 knots calibrated air speed). The contractor development flight tests were performed at this contract delivery specification to measure the multiple kills requirement.

Direct Attack Munitions. Direct attack munitions that use the TMD, such as the SFW, are susceptible to wind-induced errors, munition dispersion, and ballistic aim point errors cannot be compensated by the delivery aircraft. The

TMD-induced errors become more pronounced as the delivery release altitudes increase above the target. Because the SFW is an unguided direct attack ballistic munition, the impact of wind effects and dispersion errors over the target reduces multiple kills effectiveness.

Operational Requirements

The APB performance parameters are inconsistent with the Requirements Correlation Matrix that the Air Force uses to evaluate the stated number of multiple kills per pass requirement because the two documents do not include the same delivery envelope parameters. The current ORD, November 7, 1991, provides the same delivery envelope release criteria as the APB for:

- o altitude of 200 feet to 20,000 feet,
- o attitude of +45 degrees to -45 degrees,
- o airspeed of 250 to 650 knots calibrated airspeed, and
- o acceleration +0.5 to +5.0 gravity.

Requirements Correlation Matrix. The Requirements Correlation Matrix defines a different delivery envelope for altitudes, attitudes, and airspeed against which the average multiple kills per aircraft pass requirement is measured in Government operational tests:

- o altitude of 200, 300, 400, 500, 1,000, 1,800, and 8,500 feet;
- o attitude of 0, -5, -10, -20, -30, and -45 degrees; and
- o airspeed of 480, 540, and 600 knots calibrated airspeed.

The APB fails to reference the Requirements Correlation Matrix delivery parameters and only cites the delivery parameters in the basic ORD. This difference is misleading and has caused confusion in the Air Force and in the Office of the Director, Operational Test and Evaluation, on exactly what the ORD, APB, and Requirements Correlation Matrix requirements should be for low, medium, and high delivery envelope release regimes.

In a May 24, 1994, memorandum, "Sensor Fuzed Weapon (SFW) Requirements," the Director of Test and Evaluation, Office of the Chief of Staff of the Air Force, informed the Director of Requirements, Air Combat Command, that the multiple kills per pass requirement needs to be clarified in the ORD by "linking it to the specific altitude regime where you intend to achieve it, and state clearly that the kills per pass requirement outside the altitude regime will be achieved by the addition of the Wind Corrected Munitions Dispenser to the SFW weapon."

Wind Corrected Munitions Dispenser. The Air Combat Command's Concept of Operations for the Wind Corrected Munitions Dispenser (WCMD) stated that the need for a WCMD evolved from deficiencies identified in unguided munitions during Operation Desert Storm. Approximately one-third of attack sorties were ineffective due to adverse weather conditions, heavy ground fire, and anti-aircraft artillery that forced a large percentage of sorties to fly and release their weapons at higher than optimum altitudes.

The Air Combat Command identified the need to employ the SFW effectively from medium- to high-altitudes (5,000 feet through 25,000 feet) in low- to medium-threat environments, as well as provide for an accurate loft capability from a low-altitude release. The Air Force identified the WCMD as the solution to correct for wind effects and ballistic errors inherent in unguided munitions delivered above the target, such as the SFW. The WCMD will permit aircraft to release the SFW while employing the full spectrum of the delivery envelope required in the current APB. A description of the WCMD program is in Appendix I.

Operational Tests

The operational flight tests for the SFW primarily use low-level delivery tactics to evaluate the effectiveness of average multiple kills per aircraft pass and do not validate the APB multiple kills requirement across the delivery envelope (200 feet through 20,000 feet). The SFW IOT&E phase 1 tests used low-level delivery tactics of 3,000 feet or less (except for three tests at 3,710 feet; 8,600 feet; and 9,300 feet) to measure the multiple kills requirement. See Appendix J for planned or exercised delivery altitudes during operational tests.

The Air Force revised the IOT&E phase 2 test plan to eliminate all medium- to high-altitude (5,000 feet through 25,000 feet) delivery releases. The Director, Operational Test and Evaluation, approved this revised test plan because the Air Combat Command (the user) is willing to defer a medium- to high-altitude capability until a WCMD is available for SFW at the end of this decade. However, the Director stated that "the operational impacts of this action must be fully considered prior to the milestone-III decision." Flight test data and modeling analysis indicate a low confidence that the current SFW configuration without WCMD will achieve threshold multiple kills per pass requirement due to reduced effectiveness when released above low delivery altitudes.

Selected Acquisition Report

The SFW Selected Acquisition Report (SAR) report, December 31, 1994, to Congress is misleading because it does not include the same APB delivery envelope release conditions cited in the Requirements Correlation Matrix. The DoD Manual 5000.2-M, Part 17, "Selected Acquisition Report," states that

Congress should receive "an assessment of the extent to which the system is expected to satisfy its current mission requirements, identifying any areas where it will fall short in cost, schedule, and performance."

Program Highlights. The DoD Manual 5000.2-M, Part 17, guidance for SAR, Section 7, "Program Highlights," requires a summary of significant accomplishments and developments to include program highlights from program inception to the present. Specifically, program highlights should address the significant cost, schedule, and performance changes since the last report.

The SAR, December 31, 1994, Section 7, "Program Highlights," provides no detailed information that the SFW multiple kills per pass effectiveness is reduced due to ballistic errors and wind effects when the delivery envelope increases from low to high altitudes. The SAR does not discuss that the Air Force's WCMD program ($1.5 billion) is the Air Combat Command's solution to this delivery envelope deficiency.

Performance Characteristics. The DoD Manual 5000.2-M, Part 17, guidance for SAR Section 10, "Performance Characteristics," requires a list of quantifiable system performance parameters that are the primary indicators of technical achievement of engineering objectives and thresholds and the system's operational capability to accomplish the mission. The performance characteristics should be representative of the parameters that will be subject to contractor development and Government operational tests to evaluate the system's effectiveness.

The SAR, December 31, 1994, Section 10, "Performance Characteristics," includes data from the APB, the ORD, the demonstrated test results, and the program manager estimates as shown in Appendix H. The SAR to Congress did not include the same APB delivery envelope data parameters as the Requirements Correlation Matrix (RCM) parameters. The SAR "Demonstrated Performance" column and "Program Manager's Estimate" column show that delivery envelope parameters vary from the results of development and Government operational tests and the RCM parameters. The footnotes for these columns do state that the effectiveness of multiple kills per aircraft pass is degraded at higher altitudes; however, the footnotes do not define the delivery altitude regime when the kill effectiveness degrades and to what degree.

Conclusion

The Air Force provided confusing and inaccurate SFW acquisition management documentation to DoD and congressional decisionmakers. DoD acquisition policy states that a link should exist between cost and operational effectiveness analyses, test and evaluation, ORD, and APB, particularly the measures of effectiveness and measures of performance parameters. The criteria in the ORD, which defines the military utility of a weapon system, should be consistent among all acquisition management documentation. The Air Force and the Office of the Under Secretary of Defense for Acquisition and

Technology need to define and document what the SFW average multiple kills per pass requirement is for each low, medium, and high delivery envelope regime to assess and report the military utility of the system in various combat environments.

Recommendations, Management Comments, and Audit Response

Redirected Recommendation. As a result of Under Secretary of Defense for Acquisition and Technology comments, we redirected draft Recommendation B.3.a. to the Assistant Secretary of the Air Force (Acquisition) because of oversight cognizance. Draft Recommendations B.3.a. and B.3.b. have been renumbered as Recommendation B.3. and B.4., respectively.

B.1. We recommend that the Commander for Air Combat Command revise both the Sensor Fuzed Weapon System's Operational Requirements Document and the attached Requirements Correlation Matrix, November 7, 1991, to:

a. Apply the same delivery envelope performance characteristic parameters for multiple kills per aircraft pass requirement (mobility, firepower, and catastrophic) at low, medium, and high-altitude release regimes.

b. Apply a specific multiple kills per aircraft pass requirement (mobility, firepower, and catastrophic) for the delivery envelope at low, medium, and high-altitude release regimes.

Air Force Comments. The Office of the Assistant Secretary of the Air Force (Acquisition) nonconcurred with Recommendations B.1.a. and B.1.b., stating that the operational requirement is correctly stated as the average number of kills for a specific aircraft weapon load out and delivery conditions. The SFW is expected to achieve the average kills based on a set of representative delivery conditions of 200, 300, 400, 500, 1,000, 1800, 3000, and 8,500 feet altitudes; +45 degrees to -45 degrees attitude; and 480, 540, and 600 knots calibrated air speed.

The Air Force recognizes the advantages of employing SFW from high altitudes; however, a high altitude delivery regime was not an original operational requirement. The WCMD kit will improve SFW performance when employed from medium to high altitude and will be used when the weapons are employed above 10,000 feet. Also, the Air Force stated that the audit report incorrectly defined medium to high altitude as 5,000 through 25,000 feet.

Audit Response. We disagree with the Air Force position. The intent of the recommendations was to clarify the key performance parameters for the Acquisition Program Baseline, Operational Requirements Document, and the Selected Acquisition Report to ensure consistency and a link between these

documents. The Air Force response does not address the inconsistency between these documents. As stated in the final report, the Air Force Director of Test and Evaluation also stated that the multiple kills for the delivery regimes needed to be clarified in the ORD.

We issued the official draft report and associated Recommendations B.1.a. and B.1.b. to reflect Air Force comments on the SFW working draft report. In a February 28, 1995, memorandum, "Working Draft Report on the Audit of the Acquisition of the SFW," the Chief of Force Application Division, Air Combat Command, stated that "the RCM defines the release altitudes (200, 300, 400, 500, 1000, 1800, 3000, and 8500 feet) for which the average kill requirement is measured against. Because the SAR and APB fail to make reference to these altitudes and only state the release envelope (200 to 20,000 feet), this is misleading."

Also, the memorandum stated that the

> . . . release conditions for which the average kill requirement is to be measured against are not explicitly stated in the body of the SORD [System Operational Requirements Document] (i.e. these conditions are just stated in the RCM), ACC [Air Combat Command] plans to add the conditions in the body of the SORD. Furthermore, ACC plans to delete the 8,500 feet release conditions. The specified average kill requirement was originally intended for low altitude release; however, the 8500 was included due to Desert Storm medium altitude employment tactics. SFW is still expected to get multiple kills per pass from medium to high altitude, however, the number of kills is expected to be less than the kills at low altitude.

We agree that the original operational requirement did not have a high altitude delivery regime (25,000 feet and above); however, the statement in the report is correct for medium- to high-altitude releases. The Air Combat Command provided the auditors with the altitude employment definitions based on the Air Force Multi-Command Manual 3-1, Volume I, Change 1, "Tactical Employment General Planning & Employment Considerations, (U)," June 1994. According to the manual, low-altitude employment is below 5,000 feet above ground level; medium-altitude employment is 5,000 feet above ground level to 25,000 feet mean sea level; and high-altitude employment is above 25,000 feet mean sea level.

We request that the Air Force reconsider its nonconcurrences based on Air Combat Command's memorandum comments to the "Working Draft Report on the Audit of the Acquisition of the SFW" and comment again on these recommendations in response to the final report.

B.2. We recommend that the Director, Area Attack System Program Office:

a. Revise the Acquisition Program Baseline delivery envelope performance characteristic parameters to agree with Recommendations B.1.a. and B.1.b. revisions.

Air Force Comments. The Office of the Assistant Secretary of the Air Force (Acquisition) concurred, stating that the Acquisition Program Baseline will be revised to agree with Requirements Correlation Matrix delivery parameters.

Audit Response: We consider the Air Force comments responsive. The Air Force did not indicate the date by which the action will be complete. We ask the Air Force to provide the date in its response to the final report.

b. Revise the Selected Acquisition Report, December 31, 1994, to comply with DoD Manual 5000.2-M, Part 17, "Selected Acquisition Requirements," and submit a quarterly update for:

(1) Section 7, "Program Highlights," to include a discussion of the current operational delivery limitations for medium- to high-altitude releases to achieve the multiple kills per aircraft pass requirement (mobility, firepower, and catastrophic).

(2) Section 10, "Performance Characteristics," to include the revised Acquisition Program Baseline delivery envelope threshold requirements and provide more detailed footnotes to clarify what the average multiple kills per aircraft pass requirement (mobility, firepower, catastrophic) is at low, medium, and high-altitude release regimes.

Air Force Comments. The Office of the Assistant Secretary of the Air Force (Acquisition) nonconcurred with Recommendation B.2.b., stating that the December 1994 SAR, Section 7, "Program Highlights," does not need to address operational capabilities at medium- to high-altitude delivery releases because program requirements have not changed and the weapon system continues to meet the ORD operational criteria. No additional information is needed in Section 10, "Performance Characteristics," because footnote 4 was clarified to explain how the average kills are based on the RCM delivery parameters.

Audit Response. We disagree with the Air Force position. The December 1994 SAR, Section 7, "Program Highlights," does not provide information or an assessment on the reduced multiple kills effectiveness at altitudes above RCM delivery conditions (8,500 feet). It also does not indicate that the WCMD program will correct the medium- to high-altitude delivery envelope limitation by the end of the decade. Further, no information is on the waiver granted by the Director, Operational Test and Evaluation, to eliminate all Initial Operational and Evaluation Phase 2 tests for aircraft delivery releases from 5,000 feet through 25,000 feet altitudes to test operational capabilities. The Director approved the revised test plan because the Air Force is willing to defer a medium- to high-altitude delivery capability until the SFW tactical munition dispensers are retrofitted with the WCMD kits at the end of this decade.

The SAR, Section 10, "Performance Characteristics," APB Objective and Threshold columns delivery parameters need to be revised because they do not reflect Air Force concurrence with Recommendation B.2.a. to revise the APB to agree with the RCM delivery conditions. Also, Section 10's Demonstrated Performance column's delivery data elements need to be revised because they

do not represent the RCM delivery conditions used in the Initial Operational and Evaluation Phase 2 tests to evaluate the kills requirements. Appendix J of this report shows the test altitudes being used.

DoD Manual 5000.2-M, Part 17, Attachment 1, requires significant developments be highlighted in Section 7 to focus on changes since the previous SAR report. The guidance requires an assessment of the weapon system to the extent that the system is expected to satisfy mission requirements and requires an identification of any area where the system will not meet current mission requirements. The guidance for Section 10 requires that each data element reported in the Demonstrated Performance column must be the value actually achieved in the latest development or operational testing program. The results of operational tests will take the highest precedence for reporting the Demonstrated Performance column in the SAR.

We request that the Air Force reconsider its nonconcurrence based on DoD Manual 5000.2-M requirements and the revision to the APB delivery parameters and comment again on this recommendation in response to the final report.

c. Submit a revised Selected Acquisition Report, to update Section 7, "Program Highlights," and Section 10, "Performance Chacteristics," of the December 31, 1994, Selected Acquisition Report on the program status to Congress.

Air Force Comments. The Office of the Assistant Secretary of the Air Force (Acquisition) nonconcurred, stating that the December 1994 SAR does not require updating because it is correct and accurate as reported to Congress. The congressional defense committees are kept informed with quarterly status reports about the program's cost, schedule, and performance and also through briefings on the status of the Wind Corrected Munitions Dispenser program. Any improvements in medium- to high-altitude performance will not occur until the Sensor Fused Weapon is retrofitted with a kit later this decade. Providing this information in quarterly status reports would provide no new information to Congress.

Audit Response. The Air Force misunderstood the intent of the recommendation, which was to have the December 1994 SAR updated rather then wait until the December 1995 SAR is issued to Congress. We are not advocating quarterly SARs on the status of the SFW program but only one quarterly update to the December 1994 SAR.

We commend the Air Force on keeping various congressional committees informed on the status of the SFW and WCMD programs. However, the program information and status reports need to be reflected in the December 1994 SAR to provide Congress and DoD officials a stand-alone document on the weapon program's cost, schedule, and performance for a current and historical prospective.

We request that the Air Force reconsider its nonconcurrence and comment again on this recommendation in response to the final report.

B.3. We recommend that the Assistant Secretary of the Air Force (Acquisition) review the revised Sensor Fused Weapon Acquisition Program Baseline document, the revised Operational Requirements Document, and the revised Requirements Correlation Matrix document for consistency and accuracy in stating the system's operational performance characteristics.

Under Secretary of Defense for Acquisition and Technology Comments. The Under Secretary of Defense for Acquisition and Technology stated that the SFW is no longer a Defense Acquisition Board program with its oversight because the acquisition authority was delegated to the Air Force November 16, 1994. As a result, this recommendation should be directed to the Air Force Acquisition Executive.

Audit Response. Based on the Under Secretary comments, we redirected this recommendation and request that the Assistant Secretary of the Air Force (Acquisition) provide comments in response to the final report.

B.4. We recommend that the Under Secretary of Defense for Acquisition and Technology review the revision to the December 31, 1994, Selected Acquisition Report to ensure Congress is accurately informed on the program status of the Sensor Fused Weapon program and that the report complies with DoD Manual 5000.2-M, Part 17, "Selected Acquisition Report" guidance.

Under Secretary of Defense for Acquisition and Technology Comments. The Under Secretary of Defense for Acquisition and Technology stated that the December 1994 SAR submitted to Congress on April 7, 1995, included revisions and comments from the Office of the Secretary of Defense staff's review. They believed that the SAR accurately informs Congress on the SFW program status as well as other programs and complies with guidance in DoD Manual 5000.2-M. Consequently, this recommendation should be deleted from the report.

Audit Response. The Under Secretary of Defense for Acquisition and Technology's review of the December 1994 SAR is responsive to the intent of our recommendation to review the SAR; however, we disagree with the conclusion that the December 1994 SAR does not need to be updated. See audit response to Recommendation B.2.b.

We request that the Under Secretary of Defense for Acquisition and Technology reconsider its nonconcurrence and comment again on this recommendation in response to the final report.

Management Comments Required

Management is requested to comment on the items indicated with an X in Table 2.

Table 2. Management Comments Required on Finding B.

Recommendation	Organization	Concur/ Nonconcur	Proposed Action	Completion Date
B.1.a	Air Force	X	X	X
B.1.b	Air Force	X	X	X
B.2.a	Air Force			X
B.2.b(1)	Air Force	X	X	X
B.2.b(2)	Air Force	X	X	X
B.2.c.	Air Force	X	X	X
B.3	Air Force	X	X	X
B.4.	Under Secretary of Defense for Acquisition and Technology	X	X	X

Finding C. Cost and Operational Effectiveness Analysis

The SFW Cost and Operational Effectiveness Analysis (COEA), November 1991, does not provide adequate decisionmaking information because COEA analysis factors have changed significantly since the analysis was performed in 1991. As a result, the Air Force may not make a fully informed decision for the SFW full-rate production.

Background

DoD Instruction 5000.2, "Defense Acquisition Management Policies and Procedures," Part 4, Section E, February 1993, and DoD Manual 5000.2-M, "Defense Acquisition Management Documentation and Reports," Part 8, March 1993, discuss the policies and procedures for developing a COEA to support a milestone decision. These analyses are intended to accomplish three objectives:

o illuminate the relative advantages and disadvantages of the alternatives being considered and show the sensitivity of each alternative to possible changes in key assumptions, for example, cost, threat, or performance;

o facilitate communications among decisionmakers and staffs at all levels by early identification and discussion of reasonable alternatives; and

o document acquisition decisions by providing the analytical basis or rationale for program decisions.

The DoD guidance requires that COEAs be developed and considered at key decision points in the development of acquisition programs. The guidance also directs that updated or new COEAs should be developed when conditions change significantly. We concluded that significant changes in key concepts affecting the COEA analysis have occurred since 1991. Changes in the operational concept, measures of effectiveness, available alternatives, and costs require that an updated COEA be developed to support the full-rate production decision.

The scope of a COEA depends upon the milestone decision to be made and the system's cost. With reference to Milestone III, production approval, the guidance states that the analysis may be an update. The guidance also states that an assessment is not required "unless conditions have changed sufficiently so that previous cost-effectiveness determinations are no longer valid." A key determination regarding the scope of the COEA would be the extent to which conditions have changed. The COEA should be reviewed and updated to reflect changes in threat and missions, new performance assumptions, and increased costs.

Analysis Factors

The SFW November 1991 COEA does not provide adequate decisionmaking information because the analysis factors have changed significantly. The COEA gives explicit measures of merit for evaluating the anti-armor alternatives, including the numbers of kills per pass, the sorties per kill, munitions per kill, and aircraft attrition per kill. All measures of merit were used to calculate a cost per kill for each evaluated alternative.

DoD 5000.2-M guidance on developing a COEA lists 12 key concepts that need to be considered. Our analysis of these key concepts is in Appendix K and summarized in Table 3 for SFW.

Table 3. Significant Changes in Concepts Since 1991

	Substantial Change		
Key Concept	Yes	No	Partly
Mission needs, deficiencies, and opportunities		X	
Threats			X
Operational concept	X		
Operational environment			X
Constraints and assumptions	X		
Functional objectives			X
Alternatives	X		
Models			X
Data for analysis	X		
Measures of effectiveness	X		
Costs	X		
Trade-off analyses			X

DoD Manual 5000.2-M, Part 8, identifies the above concepts as the essential COEA considerations.

These changes in key concepts could ultimately affect the SFW requirements. For example, the future availability of new munitions such as the Joint Stand Off Weapon should be considered in the alternatives.

Plans for Update

The Air Force does not plan to update the November 1991 COEA because it does not consider the changes significant enough to effect the conclusion that the

SFW is the most cost-effective solution. The original COEA was developed to support the Defense Acquisition Board decision for low-rate initial production.

In an August 1, 1994, memorandum, the Director of Fighter, Command and Control, Weapons Programs, Office of the Assistant Secretary of the Air Force for Acquisition, requested a waiver to submit a new or an updated COEA at the milestone III review. The waiver request stated "SFW performance or cost has not changed significantly since the start of Low-Rate Initial Production." The Deputy Director for Air Systems, Office of the Under Secretary of Defense for Acquisition and Technology, stated in a memorandum to the Air Force on October 20, 1994, that a waiver can be granted when "it is confirmed there have been no significant changes in cost, threat, or performance." The memorandum also said that a proposed change to the SFW delivery parameters needs to be resolved before the waiver is considered. As of January 6, 1995, it was unclear whether a new or updated COEA will be required and an official of the Under Secretary's office acknowledged that the requirement for a COEA to support the full-rate production decision had not yet been resolved.

An Air Force official stated that the Joint Stand Off Weapon does not need to be considered in an updated COEA because it is still in the concept development stage and, therefore, does not have to be considered as an alternative. The Air Force position appears to conflict with the DoD guidance that requires, in establishing the set of weapon system alternatives, consideration be given to both current systems, along with systems in development by other Military Departments or Allies and conceptual systems not yet on the "drawing board."

Timely Cost and Operational Effectiveness Analysis

Unless the Air Force reviews and updates the COEA, based on the changes since 1991, it may not make an informed decision for the full-rate production decision. The recent draft of a COEA for the Joint Stand Off Weapon, August 1994, disputes the conclusions in the SFW COEA. In most of its modeled scenarios, with both bombers and fighters, the Joint Stand Off Weapon was the most cost-effective munition. While the Joint Stand Off Weapon COEA was a draft that had not been formally evaluated and approved, its cost-effectiveness conclusions of stand-off weapons must be considered when deciding whether to update the SFW COEA.

Failure to update the COEA risks buying the wrong munition or the wrong mix of munitions. The SFW may, at best, be an interim solution until the Joint Stand Off Weapon enters full-rate production. An updated COEA is required for determining whether the SFW program should be limited to fewer than the 5,000 units the Air Force is intending to buy and purchase future BLU-108/B Joint Stand Off Weapons.

Another consideration is the effect of the WCMD on the COEA for SFW, specifically, the effect of the modification on the Combined Effects Munition. See Appendix I for a description of the WCMD program. The updated COEA

should evaluate the effectiveness of the modified WCMD Combined Effects Munition against armor and determine whether the Combined Effects Munition is a more effective munition against armor than was originally concluded and, if so, what impact it would have on the SFW requirements.

Recommendation, Management Comments, and Audit Response

C. We recommend that the Commander of the Air Combat Command review and update the Cost and Operational Effectiveness Analysis, November 1991, incorporating the changes in key concepts including employment tactics, the new emphasis on bombers, and changes in attrition rates and unit program cost. The review should incorporate the BLU-108/B Joint Stand Off Weapon Cost and Operational Effectiveness Analysis of stand-off weapons.

Air Force Comments. The Office of the Assistant Secretary of the Air Force (Acquisition) nonconcurred, stating that the analysis factors had not changed significantly and the JSOW BLU-108/B COEA was also available to the decision authority to supplement the information in the SFW COEA. The Air Force said that the SFW COEA will be reviewed to make excursions on the 1991 COEA analysis factors and will assess the SFW fitted with the WCMD kit and also bomber employment of the SFW. The results of the review will be provided at the SFW Milestone III review along with the results of the JSOW COEA.

Audit Response. The Air Force review of the COEA is responsive to the intent of our recommendation. We request that the Air Force indicate the date by which the action will be complete and provide a copy of the COEA review when completed for Milestone III.

Management Comments Required

Management is requested to comment on the items indicated with an X in Table 4.

Table 4. Management Comments Required on Finding C.

Recommendation	Organization	Concur/ Nonconcur	Proposed Action	Completion Date
C.	Air Force			X

Finding D. Inventory Requirements

The quality of the Air Force acquisition objectives for SFW munitions can be improved. This condition exists because the Air Force used a modeling process with incorrect data and incorrect assumptions in determining munition inventory requirements. The process the Air Force used to verify input data for inventory requirements did not identify errors related to effectiveness data for probability of kill. As a result, the inventory munition requirements cannot be accurately calculated because modeling errors can affect the SFW acquisition inventory objectives.

Background

The Air Force uses the Nonnuclear Consumables Annual Analysis (NCAA) modeling process to determine its quantitative requirements for air-to-surface munitions, which include anti-armor munitions. The NCAA is an analytical process designed to quantitatively identify the most effective mix of conventional air munitions to be programmed for procurement and maintained in the war reserve material stockpile. The model is a threat-oriented methodology in that requirements are constrained by available targets. When the model determines that all of the Air Force's target shares are killed, the requirement is satisfied. The process employs a series of models and associated data for calculating munitions requirements. SABSEL is the first model in a series of three NCAA models and the only model examined during the audit.

SABSEL. SABSEL has been used for more than 20 years; however, the introduction of "smart munitions" created a need to revise the model's algorithms and established a requirement for effectiveness data defining the capabilities of the new munitions. Together with the model changes and data, the process required that some assumptions be specified. The data for the calculations were stored for the model's use in the Weapon's Effectiveness Data Base.

The primary source of the information stored in the Weapon's Effectiveness Data Base, for "inventory weapons" or munitions already fielded and in use, is the Joint Munitions Effectiveness Manual. The program office responsible for buying a weapon generally provides the data for a new munition if the munition has not met its initial operational capability and has not been included in the Joint Munitions Effectiveness Manual. The SFW program provided tentative munition effectiveness data based upon Government operational tests and contractor development tests because the SFW has not met its initial operational capability for fielding.

Assumptions. The Air Force devised assumptions for the SFW inventory modeling. Three relevant assumptions used in the modeling were that the SFW was limited to armored targets, six predetermined aircraft release altitudes were

specified, and the SFW could only cause mobility kills or firepower kills and not catastrophic kills. The Joint Munitions Effectiveness Manual specified the types of kills achievable by each munition and defined the types of kills.

Categorize Kills. The Joint Munitions Effectiveness Manual specified the types of kills achievable by each munition and defined the types of kills.

o A mobility kill results when a target is incapable of executing controlled movement and the soldier on the battlefield cannot repair the damage.

o A firepower kill results when the target is incapable of delivering controlled fire from the main armament and the soldier on the battlefield cannot repair the damage.

o A catastrophic kill results when the target is not economically repairable after it suffers a mobility kill, a firepower kill, or both.

Model Credibility. Along with good data and realistic assumptions, assurance is needed that a model performs as intended for the purpose for which it is being used. Operations research practitioners have developed a process called verification, validation, and accreditation (VV&A) to provide this assurance.

DoD has recently increased emphasis on this process. DoD Directive 5000.59, "DoD Modeling and Simulation Management," January 4, 1994, requires the DoD Component to establish VV&A policies and procedures. Each DoD Component is to be the final authority for the VV&A of its models. The DoD Component's implementing documents were to be forwarded to the Under Secretary of Defense for Acquisition and Technology within 120 days after the Directive was issued. Currently, no VV&A process has been applied to the NCAA models.

Acquisition Objectives

The quality of the Air Force's budget acquisition objectives for munitions can be improved. The Air Force has budgeted funds for buying 5,000 SFWs. This budgeted quantity is funds constrained and is less than the NCAA-derived inventory munition requirements that is based on unconstrained Air Force budget resources. The NCAA modeling process to determine SFW funded and unfunded inventory requirements, however, included three basic errors: the SABSEL model used incorrect probability of kill variable data; munitions were released at altitudes that reduce the effectiveness of kills per pass; and no catastrophic kills were used. The errors and assumptions can result in Air Force funded and unfunded anti-armor munition requirements being incorrect. This modeling process affects inventory requirements for SFW and other alternative anti-armor munitions, such as the Combined Effects Munitions and the Joint Stand Off Weapon, that are needed for the war reserve inventory to defeat armor threats identified in the DoD Defense Planning Guidance.

Modeling Process

The Air Force used a modeling process with incorrect data and incorrect assumptions in determining munition inventory requirements. The NCAA process, as noted, is threat oriented. When the availability of a preferred war reserve munition is limited by quantity, as with the SFW, the model picks a substitute munition for the remaining targets when the preferred munition inventory is exhausted. Thus, if the effectiveness of probability of kill is overstated, the number of targets killed before the supply is exhausted is overstated. The overstated kills, in turn, cause the model to unrealistically reduce the number of alternate munitions needed because the number of remaining targets is understated. While the Air Force may no longer be buying the substitute munition selected by the NCAA model, munition effectiveness errors may affect decisions on the retention and storage of anti-armor munitions for war reserve inventory requirements.

Model Verification Process. The Air Force has not applied the VV&A process to the SABSEL model. Application of the VV&A process would have helped determine whether the model accurately represented real-world conditions and is acceptable for use and whether the documentation is adequate. For example, a user guide had been written for SABSEL. In responding to audit questions concerning the user guide information, Air Force officials stated that the guide contained inaccuracies related primarily to the section of the guide that dealt with the modeling of "smart munitions." The Air Force is rewriting the SABSEL manual for completion by summer 1995.

Data and Assumptions. The modeling process used incorrect effectiveness for probability of kill data and incorrect assumptions in calculating SFW inventory requirements. The Air Force used an informal process to verify input data that did not identify the errors related to the probability of kill data. The Air Force did not discover the errors until we questioned Air Force officials about the effectiveness factors used for different flight profiles.

Flight Profiles. The Air Force modeling used flight profiles with six predetermined release altitudes that included several above low altitude. SFW program weapon performance modeling and the results of Government operational tests have shown that as the delivery altitude increases above the target, the effectiveness of multiple kills per aircraft pass is reduced, particularly for medium- to high-altitude releases (5,000 feet through 25,000 feet).

Target Kills. SFW Government testing has shown that while most kills will be mobility or firepower target kills, some will be catastrophic kills. The Air Force assumed, when it modeled the SFW, that no catastrophic target kills would be achieved during various delivery flight profiles. This Air Force assumption was consistent with the Joint Munitions Effectiveness Manual, which does not indicate that SFW can achieve catastrophic kills.

Inventory Requirements

The inventory munition requirements cannot be accurately calculated because modeling errors and assumptions can affect the SFW acquisition inventory objectives. The Air Force may not determine the munition inventory requirements until the NCAA modeling process uses correct data and assumptions to determine the effectiveness of probability of kill. An overstated effectiveness of probability of kill decreases the calculated munition inventory requirements because more targets are projected to be killed per aircraft mission (sortie). However, an understatement of effectiveness increases the calculated inventory requirements because fewer targets are being killed per aircraft sortie. The data and assumptions used for munition altitude releases and type of kills (mobility, firepower, or catastrophic) need to be corrected for the modeling process.

Delivery Altitudes. Using SFW effectiveness for various delivery conditions should be consistent with available effectiveness information. Normally, as the delivery altitude is increased, the effectiveness of SFW is reduced. This increased delivery altitude can result in system effectiveness being overestimated for multiple kills per aircraft pass resulting in the inflated number of expected target kills per aircraft mission (sortie). Using incorrect probability of kill data will result in incorrect expected target kills per sortie factor. The expected kills per sortie factor are key data elements used in the calculations for the NCAA modeling process. If the kills per aircraft sortie are incorrectly inflated, then the NCAA modeling calculations would result in underestimated Air Force war reserve munition requirements for target threats programmed in the DoD Defense Planning Guidance.

Catastrophic Kills. If SFW catastrophic kills are not used in the modeling calculations, then the total targets projected to be destroyed may be misstated for specific conflicts identified in the DoD Defense Planning Guidance. The failure to include catastrophic kills may result in a misstatement of the total targets to be destroyed. Total targets are determined by the initial number of targets plus the regenerated targets, that is, the targets that are hit, repaired, and returned to combat to be used again within the period of conflict. For example, if it is assumed that the initial number of tanks was 100 and 75 percent of the kills against the 100 tanks were mobility or firepower, that is, repairable, the total number of targets was 175. The number represents the initial 100 targets plus 75 repaired targets [100 targets plus {100 times 75 percent} = 175 targets]. However, if all kills were assumed to be catastrophic and, therefore, none were repairable, only 100 total targets would have to be killed.

Conclusion

We are unable to determine the SFW inventory requirements because continuing to model the requirements by excluding catastrophic kills overstates the number of total targets that must be destroyed. Because the Joint Munitions

Effectiveness Manual is the primary source of effectiveness data and assumptions concerning types of kills, the Manual should be updated to reflect a catastrophic kill capability.

The effect of using unverified models is unpredictable, but, based on the discovery of the data errors, the Air Force was also confirming the SABSEL software code through partial verification. Reliance on the calculated inventory requirements should be limited, based on problems identified during the audit pertaining to data, documentation, and the failure to verify and validate the "smart weapon" modifications, such as SFW, to the models.

Recommendations, Management Comments, and Audit Response

Deleted Recommendation and Renumbered Recommendations. As a result of the Under Secretary of Defense for Acquisition and Technology comments, we deleted draft Recommendation D.1. Draft Recommendations D.2.a. through d. were renumbered as Recommendations D.1. through D.4., respectively.

D. We recommend that the Director of Forces, Air Force Deputy Chief of Staff for Plans and Operations:

1. Validate, verify, and accredit the SABSEL model in accordance with DoD 5000.59, "DoD Modeling and Simulation Management," January 4, 1994.

Air Force Comments. The Office of the Assistant Secretary of the Air Force (Acquisition) nonconcurred based on the assertion that SABSEL data are widely recognized as the best weapons effectiveness calculations available and are used in the DoD and Joint Chiefs of Staff analysis community. The Air Force is developing a new model to replace the Heavy Attack model in the NCAA process. This model will undergo the VV&A process as part of its development and SABSEL input data will be verified at the same time. The complete text of management's comments is in Part IV.

Audit Response. The Air Force plans are responsive to the intent of our recommendation. However, the Air Force did not indicate the date by which the actions will be complete. We ask the Air Force to provide the date in its response to the final report.

2. Use Sensor Fuzed Weapon's effectiveness for multiple kills per aircraft pass (mobility, firepower, and catastrophic) for various delivery conditions that are consistent with available weapon modeling and operational test information for kills per pass.

Air Force Comments. The Office of the Assistant Secretary of the Air Force (Acquisition) concurred and stated the delivery and effectiveness data were thoroughly reviewed and updated as a result of information derived from the audit.

Audit Response. We consider the Air Force comments responsive.

3. Include catastrophic kills consistent with the percentage of catastrophic kills achieved in Initial Operational Testing and Evaluation in calculation of an appropriate percentage of catastrophic kills to be used for Nonnuclear Consumables Annual Analysis modeling.

The Office of the Under Secretary of Defense Comments. The Office of the Under Secretary of Defense for Acquisition and Technology stated in its response that the Joint Technical Coordinating Group would automatically include catastrophic kill criteria in the Joint Munitions Effectiveness Manual if the testing data indicates that catastrophic kills are a significant part of target kills. A draft Joint Munitions Effectiveness Manual for the SFW will be released in late calendar year 1996 that will define the type of SFW kills to be used based on testing.

Air Force Comments. The Office of the Assistant Secretary of the Air Force (Acquisition) nonconcurred, stating that the weapon has the potential to produce a catastrophic kill but that is not its intended or primary type of kill mechanism. The Air Force models catastrophic kills on targets by using the Maverick missile. The target set is divided into mobility and catastrophic kill categories and the targets are attacked with the appropriate weapons for the type of kill required. Sometimes SFW achieves a catastrophic kill and Maverick achieves a mobility kill and the current methodology accounts for crossover of kills.

Audit Response. The Air Force position is not responsive to the recommendation. The Air Force has developed its own effectiveness data pending inclusion of the SFW data in the Joint Munitions Effectiveness Manual. The SFW development and initial operational testing indicates catastrophic kills that should be reflected in the requirements modeling process.

We request that the Air Force reconsider its position and comment in response to the final report.

4. Recalculate the inventory requirements before the next Program Objective Memorandum cycle.

Air Force Comments. The Office of the Assistant Secretary of the Air Force (Acquisition) nonconcurred, stating that inventory requirements are recalculated annually. The results of the FY 1996 NCAA will be published in the summer of 1995. The Air Force also stated that the changes recommended will not

effect the SFW procurement objective because it is budget constrained, that is, the quantity being procured is less that the quantity required to defeat the number of Land Combat Vehicles in the Defense Planning Guidance conflict scenarios.

Audit Response. It is not fully clear whether the Air Force comments are responsive to the recommendation. If the effectiveness data is updated, as recommended in Recommendation D.2., prior to recalculating the inventory requirements, then the comments are acceptable. The Air Force response does not note that substitute direct attack munitions are already in the DoD inventory and are available to defeat the Land Combat Vehicles in the Defense Planning Guidance conflict scenarios. Even though other direct attack munitions may not have multiple kills capability, that constraint is part of the trade off in the NCAA modeling process when developing direct attack munition inventory requirements to meet Defense Planning Guidance conflict scenarios.

When SFW kill effectiveness is over- or understated, the requirement for substitute direct attack inventory munitions is inversely affected by SFW requirements. The DoD decision on the retention of other direct attack weapons is effected by how many Land Combat Vehicles remain after expending the SFW inventory before other direct attack munitions are applied against the remaining threat targets. The Air Force should recalculate the SFW inventory requirements before the next Program Objective Memorandum based on the Requirements Correlation Matrix delivery parameters (8,500 feet and below) and the SFW limited catastrophic kill capability as stated by the Air Force.

We request that the Air Force reconsider its position and comment in response to the final report.

Management Comments Required

Management is requested to comment on the items indicated with an X in Table 5.

Table 5. Management Comments Required on Finding D.

Recommendation	Organization	Concur/ Nonconcur	Proposed Action	Completion Date	Related Issue
D.1.	Air Force			X	
D.3.	Air Force	X	X	X	
D.4.	Air Force	X	X	X	X

Part III - Additional Information

Appendix A. Description of Sensor Fuzed Weapon Subsystems

Tactical Munitions Dispenser (TMD). The TMD (SUU-66/B) is an inventory 1,000-pound class dispenser with a built-in timer fuze and FZU-39/B radar proximity sensor (fuze). The TMD payload consists of 10 submunition delivery vehicles (SDV), packed in two bays of five. The submunition ejection system holds the SDVs in the TMD and dispenses them after the TMD opens. The submunition ejection system includes cradles, straps, bands, and gas bags.

Submunition Delivery Vehicle (SDV). The SDV consists of a nose electronics section, projectile launcher assembly, rocket motor, and orientation/stabilization assembly. The nose electronics contain the SDV power supply, safe-arm device, sequencer, and radar altimeter. The launcher holds four projectile warheads (four projectiles for each SDV) for a total of 40 projectiles per TMD. The orientation/stabilization assembly consists of externally mounted fins, a drogue parachute, and a main parachute.

Projectile. Each projectile consists of a high-explosive warhead and liner, an electronics section, and an infrared sensor assembly. The electronics section contains the projectile power supply, safe-arm assembly, target recognition logic circuits, and the warhead detonator.

SFW Functional Sequence. The figure in Appendix B illustrates the functional sequence.

The TMD is opened by a linear-shaped charge activated by either the built-in time fuze or the radar proximity sensor. Both the timer fuze and proximity sensor have various time and altitude settings that must be preset before aircraft takeoff. The pilot selects the choice of the timer fuze and proximity sensor.

The SFW is delivered as an unguided, gravity-drop, direct-attack munition. After release, the dispenser opens according to the fuze or sensor option selected and the submunition ejection system dispenses the SDVs over the target area. Controlled sequencing by the submunition ejection system and SDV electronics disperse the SDVs along the axis of attack.

After being dispensed, each SDV descends over the target. As the SDV descends, its radar altimeter triggers projectile prearming. At the lower height of function (altitude at which the SDV will have time to properly operate), the SDV parachute is released and the rocket motor ignites. At the upper height of function, the projectile cover is removed and the projectiles move to their prelaunch position.

The rocket motor stops the descent, spins the SDV at a high rotation, and initiates the SDV ascent. The projectiles are released in pairs after the rocket motor burnout and are lofted over the target area in a randomly oriented elliptical pattern.

The projectiles scan a large area on the ground. Projectiles do not seek targets but recognize infrared signatures of operating vehicles. Upon signature recognition, a projectile fires an explosively formed penetrator at the heat source. The explosively formed penetrator is designed to penetrate the engine area of a tank, truck, or armored vehicle with enough energy to damage critical engine components and achieve a mobility, firepower, or catastrophic kill.

Appendix B. Sensor Fuzed Weapon Deployment Sequence

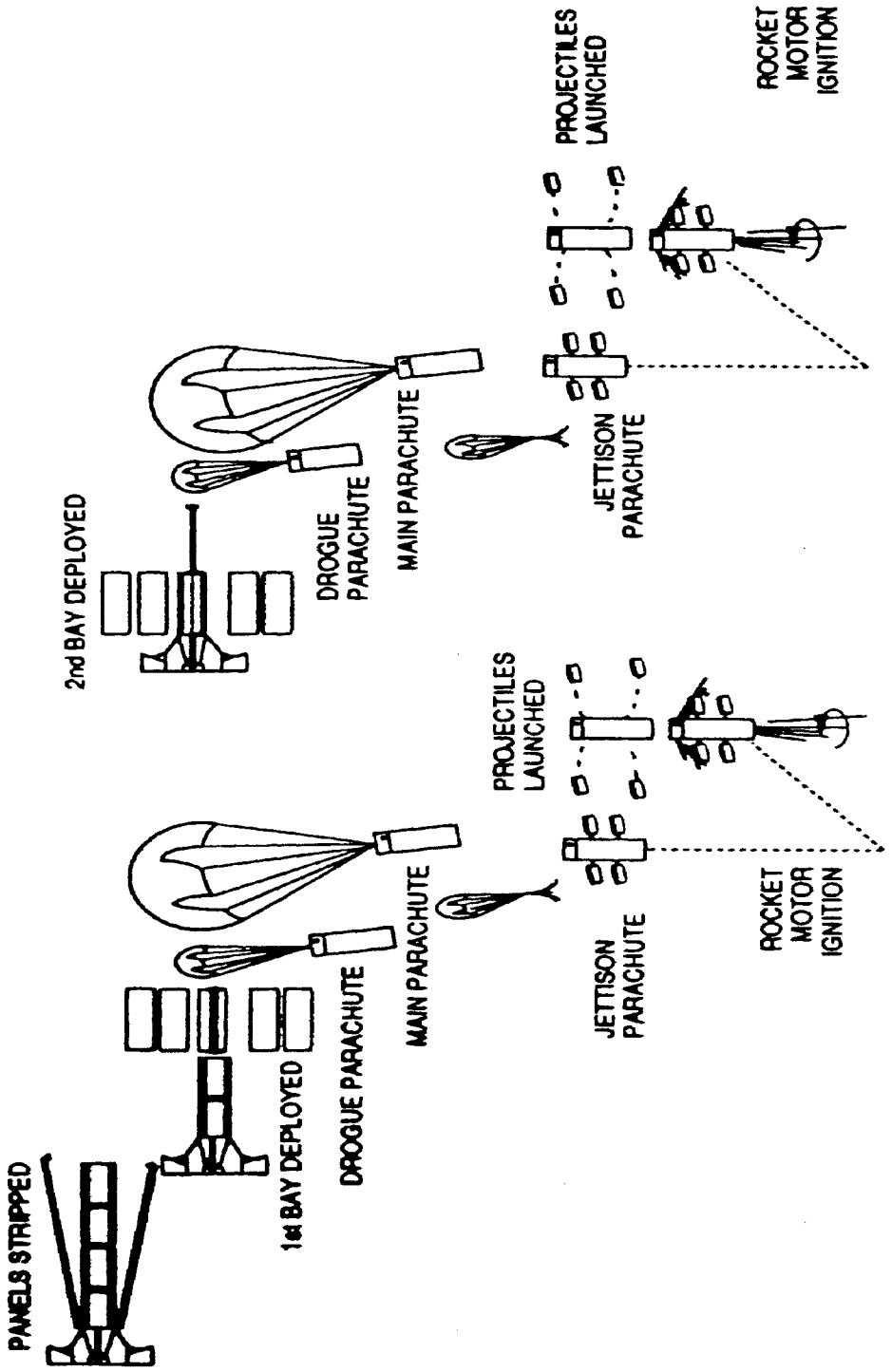

Appendix C. Product Enhancement Program

The Air Force initiated the Product Enhancement Program (PEP) in September 1992 to improve producibility through design refinements and reduce costs. The design refinements are producibility changes that will not degrade performance. The enhancements will be developed and incorporated as two hardware packages, PEP 1 (projectile) and PEP 2 (altimeter). The projectile and altimeter enhancements are independent and do not impact the performance of the other. The initial goal was to reduce production costs by about $100 million. However, the SFW program procurement quantities were reduced from 10,000 to 5,000 due to funding constraints. As a result, the Air Force projects production costs savings of $50 million instead of $100 million.

The original Air Force concept for the PEP called for PEP 1 and PEP 2. A single series of five contractor development flight tests were to be conducted to verify both PEP 1 and PEP 2 designs for full-rate production. The flight tests were to be completed before the Milestone III decision for full-rate production scheduled for December 1995. However, the SFW program revised this concept because the Acquisition Decision Memorandum required the SFW to remain in LRIP for 4 years and the Air Force did not fully fund the program until October 1994. The SFW program divided the development tests into two phases, PEP 1 and PEP 2, and delayed the design completion for the PEP 2 phase until May 1996.

Product Enhancement Program 1

In September 1992, PEP 1 was initiated for enhancements to the projectile that include design changes that:

o substitute an application-specific integrated circuit for individual parts, thus reducing the parts from 222 to 128, or by 42 percent; and

o change the safe and arming assembly by combining its two circuit boards into one circuit board.

The PEP 1 development tests are scheduled to be conducted from April through August 1995. The tests require five all-up round test articles to be delivered at an altitude of about 300 feet and 500 knots calibrated air speed, as required by contract specifications. Also, the tests are scheduled to be completed before the Milestone III decision for full-rate production.

Product Enhancement Program 2

In October 1993, PEP 2 was initiated for enhancements to the altimeter that include design changes that:

o integrate the altimeter and sequencer functions into a single application-specific integrated circuit, thus reducing the number of individual parts from 209 to 122, or by 42 percent, and

o replace the altimeter's custom-built radio frequency power supply with a less expensive off-the-self unit.

The PEP 2 development tests are scheduled to be conducted from May through August 1996. The development tests require five all-up round test articles that will include the PEP 1 enhancements. The test articles will be delivered at an altitude of about 300 feet and 500 knots calibrated air speed, as required by contract specifications. The development tests are scheduled to be conducted concurrently with follow-on operational test and evaluation phase 1.

Appendix D. Areas Not Requiring Further Review

Engineering and Manufacturing. We reviewed the Systems Engineering Management Plan, Work Breakdown Structure, Reliability and Maintainability Planning, Computer Resources, and Manufacturing Planning. Also, our review included the transition plan incorporated in the Production Transition Program and a review of the program to purchase Level III drawings. We reviewed patent issues concerning the altimeter and the projectile. We reviewed the manufacturing plan and the make-buy plans. We toured the major production facilities including Textron, Olin Aerospace Company (submunition ejection system), Hercules Aerospace Incorporated (submunition rocket motor), Eagle Picher (battery manufacturer), and the Kansas Army Ammunition Plant (Load, Assembly, and Pack facility). Our review evaluated the manufacturer's quality programs at each of the five facilities we visited. We concluded that Textron and the Government have established plans and processes that were successfully transitioning from development to production for the current SFW configuration.

Logistics and Other Infrastructure. We reviewed the Integrated Logistics Support Plan and related documents. The plan adequately addressed and supported the logistics and infrastructure requirements. The SFW has no special maintenance, training, or storage requirements because of its design as an all-up round munition. It does not require periodic maintenance beyond external inspections of the sealed storage container. The storage container and the Tactical Munitions Dispenser for training are common to the Gator and Combined Effects Munition. The SFW will not require facility construction and will use existing storage facilities.

Contract Performance Measurement. We reviewed the contract performance with the Defense Plant Representative Office at Textron. The SFW program had a Memorandum of Agreement that supplemented the FAR requirements and defined specific responsibilities for both parties. From our review, we determined that Textron maintained adequate control of the SFW program. Textron operated an approved cost and control system that provided adequate information for decisionmaking by both Textron and the Government.

Contracting. We reviewed contract documents and actions related to source-selection and management. Our review included the low-rate initial production (LRIP) contracts phases 1 through 3, along with the Defense Plant Representative Office's system for tracking the status of contract data requirements lists and contract line item number submission requirements. We also reviewed the "Justification and Approval" for the sole-source contracts awarded to Textron. We verified that the Defense Contract Audit Agency audited Textron's subcontractor pricing, contract proposals, forward pricing rates, and interdivisional transfers. Our review also examined and evaluated the forward pricing rate agreement for calendar years 1994 through 1996 that the Defense Plant Representative Office and SFW program had signed. We verified the Defense Plant Representative Office's management support of

subcontract management. The SFW program awarded contracts in accordance with the Federal Acquisition Regulation that resulted in fair and reasonable contract prices for the Government. Textron's low-rate initial production contract proposal prices were based on actual vendor-negotiated prices.

Test and Evaluation. The Air Force scheduled four operational test phases: two initial operational test and evaluation phases and two follow-on operational test and evaluation phases to be conducted from June 1990 through December 1998. These operational tests require 85 test articles (full-up round) for a cost of $85 million.

The IOT&E phase 1 was completed in 1991 and supported the Defense Acquisition Board decision for low-rate initial production in March 1992. The IOT&E phase 1 test used 35 test articles and cost $35 million. The IOT&E phase 2 test will duplicate phase 1 tests but also will be expanded to include additional countermeasures, different target arrays, and more dive bomb and multiple munition deliveries. The test consists of 8 missions in which 10 test articles will be delivered by F-16 and F-111 aircraft. The tests are scheduled from February through July 1995 and will support the Milestone III decision for full-rate production scheduled for December 1995.

Follow-on operational test and evaluation will be conducted in two phases to answer the critical operational issues, to assess Combat Air Force delivery tactics, and to assess PEP 1 and 2 changes. The follow-on operational test phases are scheduled from April 1996 through December 1998. The test phases require 40 test articles that include the product enhancement program changes and will cost about $40 million.

Appendix E. Prior Audits and Other Reviews

General Accounting Office, NSIAD Report 91-235 (OSD Case No. 8718), "Munition Procurement, Resolve Questions Before Proceeding With Sensor Fuzed Weapon Production," August 1991, concluded that the Air Force's cost and operational effectiveness analysis was incomplete because effectiveness criterion for interdiction weapons was not complete and the SFW was not compared to other interdiction weapons. The report recommended that effectiveness criterion for interdiction weapons be developed, a SFW cost and operational effectiveness analysis be conducted that includes a full range of interdiction weapons, and the SFW full-rate production decision be delayed until the Air Force demonstrates the SFW in an interdiction role. Management actions were considered responsive to the recommendations.

Office of the Inspector General, DoD, Report No. 92-050, "Review of the Sensor Fuzed Weapon as a Part of the Audit of Effectiveness of the Defense Acquisition Board Review Process--FY 1992," February 18, 1992, concluded that the Air Force did not establish adequate program-specific exit criteria for proceeding with future SFW production decisions. Also, the Air Force had not submitted the Acquisition Program Baseline agreement to the Under Secretary of Defense for Acquisition and the Joint Requirements Oversight Council for review. The report recommended the development and incorporation of exit criteria, directed the development of proposed performance parameters, and established an acquisition performance baseline for the SFW program. Management actions were considered responsive to the recommendations.

Office of the Inspector General, DoD, Report No. 90-072, "Final Report on the Audit of the Acquisition of the Sensor Fuzed Weapon," May 23, 1990, concluded that the SFW may not satisfy the mission requirement of the Tactical Air Forces for a conventional anti-armor munition capable of inflicting multiple kills per single aircraft pass against a Soviet armored threat and that planned testing of SFW will not adequately assess required system performance in the postulated Soviet threat. Also, deviations to critical program baseline parameters were not reported to the Office of the Secretary of Defense as required by law. The SFW requirements for the SEEK EAGLE weapon certification program were overstated. The report recommended a COEA be conducted to determine whether the SFW is the most cost-effective anti-armor weapon system to meet the interdiction mission requirements; the Defense Acquisition Board convene after the COEA results are published; and the draft IOT&E test plan be revised to include representative Soviet vehicle types, infrared signatures, realistic operation, and terrain. Management actions were considered responsive to the recommendations.

Air Force Audit Agency Report No. 40394007, "Management of the Sensor Fuzed Weapon Warranty," October 1993, concluded that the SFW Program Office calculated incorrect warranty cost benefit analysis for the LRIP phases 1 and 2 contracts, contractors were providing insufficient warranty cost breakdowns, and an extended performance requirement warranty was not cost-effective. The report recommended that the program director require future warranty cost benefit analysis be prepared in accordance with prescribed procedures, require contractors to provide detailed cost proposal data, and initiate efforts to obtain a waiver on the essential performance requirements. Management actions were considered responsive to the recommendations.

Appendix F. Candidates for Component Breakout

Shipping and Storage Container

The SFW CBU-97/B munitions are packaged two per CNU-411 A/E shipping and storage container for safety and security during transport and storage. The shipping and storage container is a common use item within the DoD supply system (National Stock Number 8140-01-265-4103). The Gator and Combined Effects Munition weapon systems also use this shipping and storage container.

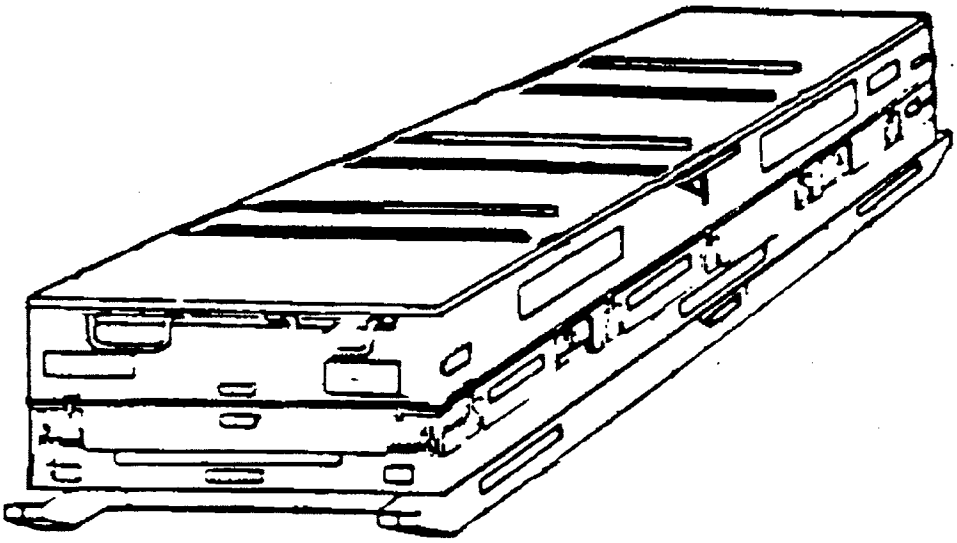

Figure F.1. Shipping and Storage Container

Tactical Munitions Dispenser

The SUU-66/B Tactical Munitions Dispenser (TMD) is a common weapons dispenser. The TMD is a common use item within the DoD supply system (National Stock Number 1325-01-362-6510). The Gator and Combined Effects Munition weapon systems use variations of this TMD as a weapon dispenser. The TMD has a stable design and has not developed any quality defects during production. Government representatives at the subcontractor's facility stated that the TMD should be considered for component breakout.

Submunition Ejection System

The submunition ejection system deploys the forward and aft BLU-108/B submunitions. Olin Aerospace Company began developing the submunition ejection system in June 1984. Production qualification testing and first article testing were completed in June 1993. Olin does not anticipate engineering or design changes. Olin has delivered 94 low-rate initial production units to the load, arm, and pack facility for installation into the TMD.

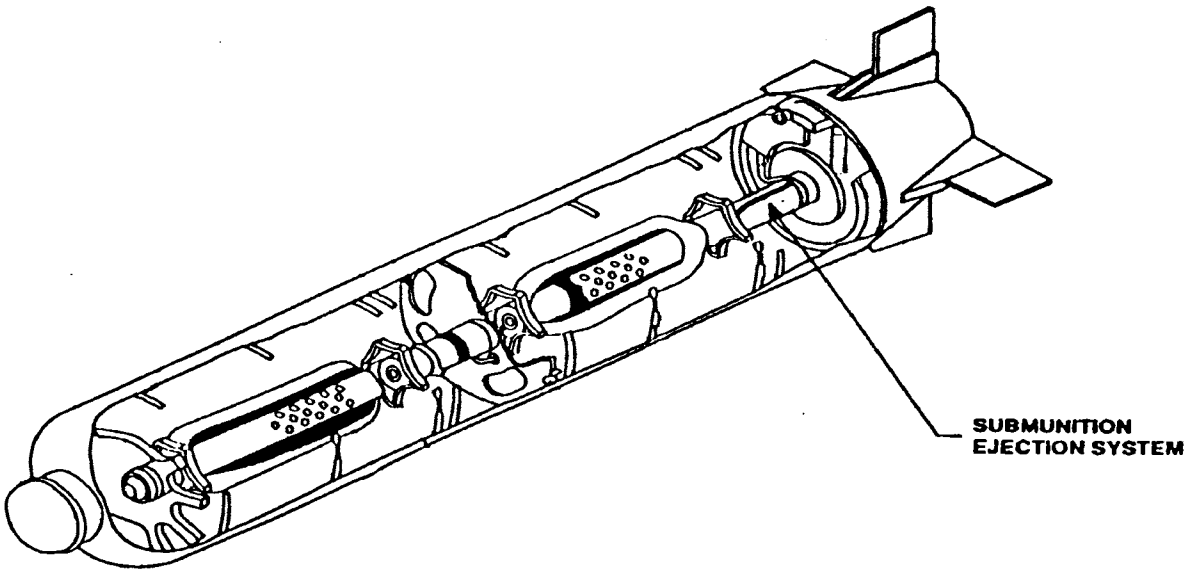

Figure F.2. Tactical Munitions Dispenser

Submunition Rocket Motor

The rocket motor propels the BLU-108/B to proper altitude and angle for projectile release. Hercules Aerospace, Incorporated, began developing SFW rocket motors in August 1984. Production qualification testing was completed in May 1994. No engineering or design changes are planned. Hercules has delivered 1,150 low-rate initial production units to the load, arm, and pack facility for installation into the BLU-108/Bs. Government and subcontractor representatives stated that the rocket motor should be considered for component breakout.

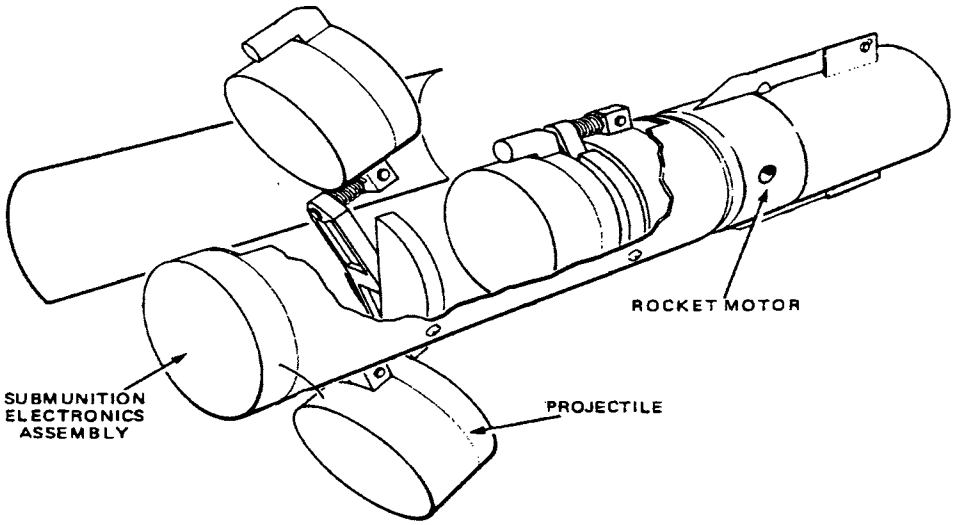

Figure F.3. Submunition Rocket Motor

Proximity Sensor

The FZU-39/B proximity sensor functions at a preselected altitude. The proximity sensor is a common use item within the DoD supply system (National Stock Number 1325-01-074-7648). The Gator and Combined Effects Munition weapon systems also use this proximity sensor. No quality control or production problems have been encountered during the production of the proximity sensor. The design is stable and no engineering change proposals have been issued during the production of the proximity sensor. Government representatives at the subcontractor's facility stated that the proximity sensor should be considered for breakout.

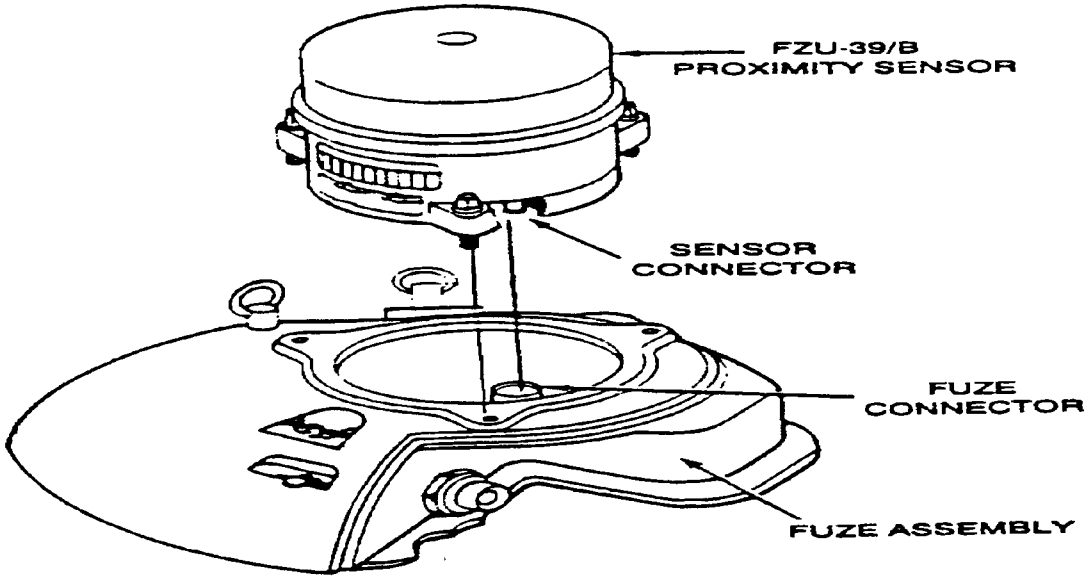

Figure F.4. FZU-39/B Proximity Sensor

Appendix G. Potential Monetary Benefits From Component Breakout

Component	Prime Contractor Unit Cost[1]	Quantity of Components[2]	Total Cost of Components
Rocket Motors[3]	*	39,080	*
Ejection System	*	3,908	*
Dispenser	*	3,908	*
Container[4]	*	1,954	*
Proximity Sensor	*	3,908	*
Total Prime Contractor Component Costs			*
Percent Prime Contractor Mark-Up Factor[5]			*
Total Breakout Benefits[6]			$77,234,000

[1]Cost per component.

[2]Based upon FYs 1996 through 2001 quantity of 3,908 SFW full-rate production units.

[3]One SFW production unit contains 10 Rocket Motors.

[4]One Shipping and Storage container holds two SFW production units.

[5]The Prime Contractor Mark-Up Factor includes overhead rates, cost of money, and profit rate.

[6]Additional component breakout benefits: $12,000,000 for the FY 2002 procurement of 600 units ($14,500,000 adjusted for inflation in FY 1995 dollars).

*FOR OFFICIAL USE ONLY data and contractor proprietary data deleted.

Appendix H. Approved Performance Characteristics

Performance Characteristics	Initial Development APB Objective	Current Development APB Objective	Threshold	Demon-strated Perform-ance	PM's Current Estimate	
Aircraft Compatability	A-7,A-10 F-15, F-16, F-111	F-16 A/B/C/D, F-15E, F-111A/D /E/F/G, A-10, USMC/USN A/C, NATO A/C	F-16 A/B/C/D, F-15E, F-111 A/D/E/F/ G, A-10	F-16 A/B/C/D, F-15E, F-111 A/D/E/F/ G, A-10	F-16 A/B/C/D, F-15E, F-111 A/D/E/F/ G, A-10, USMC/USN A/C, NATO A/C B-52H, B-1, B-2	[U]
Shelf Life In Container (yr)	N/A	15	10	TBD	10 1/	[U]
Service Life Out of Container (yr)	N/A	2	1	3	1 1/	[U]
Weight (lb Class Munition)	N/A	1000	1000	925	1000	[U]
Delivery					2/	[U]
Altitude FT AGL	N/A	200	200	228	200	[U]
Altitude FT MSL	N/A	20000	20000	18700	20000	[U]
Attitude (degrees)	N/A	+45 to -45	+45 to -45	+15 to -45	+45 to -45	[U]
Airspeed (KCAS)	N/A	250 to 700	250 to 650	250 to 648	200 to 650	[U]
Acceleration (Gs)	N/A	+0.5 to +5	+0.5 to +5	+0.5 to +4	+0.5 to +5	[U]
Targets	N/A	See Footnote 3/	See Footnote 3/	See Footnote 3/	See Footnote 3/	[U]

Appendix H. Approved Performance Characteristics

Performance Characteristics	Initial Development APB Objective	Current Development APB Objective / Threshold		Demon-strated Perform-ance	PM's Current Estimate	
Lethality - Kills per Pass*	N/A				4/	[ ]
System Reliability	N/A	.89	.79	.83	.89 5/	[U]
Lethality - Kills per Pass* (Countermeasured Environment)	N/A				6/	[ ]

Other Significant Performance Characteristics

No data entered.

[U]Acronyms:
- AGL - Above Ground Level
- APB - Acquisition Program Baseline
- KCAS - Knots Calibrated Air Speed
- MSL - Mean Sea Level
- PM - Program Manager
- TMD - Tactical Munitions Dispenser
- N/A - Not Applicable

1/ Worldwide climatic conditions assumed for shelf and service life. Service life denotes out-of-container time, including multiple aircraft flights.

2/ The employment envelope has the following corners: 1) 600 Ft/250 KCAS, 2) 200 Ft/480 KCAS, 3) 200 Ft/650 KCAS, 4) 20,000 Ft/650 KCAS and 5) 20,000 Ft/250 KCAS. The A-10 will drop the SFW at altitudes commensurate with safe-escape. Acceleration will be as imposed by aircraft/stares/dispenser interface.

3/ Primary: Main battle tanks, armored personnel carriers, and armored artillery. Secondary: Trucks and other support vehicles.

*Note: A classified version of Appendix H with lethality performance characteristics is available upon request.

Appendix H. Approved Performance Characteristics

4/ Average release of four weapons/pass versus Representative Armored Formation (RAF) target set. Includes mobility, firepower, or catastrophic kill categories. This number represents the average expected performance of all dive and level deliveries for a non-countermeasured environment based on the compilation of multiple delivery altitudes as specified in 7 November 1991, System Operational Requirements Document, Requirements Correlation Matrix note 4 and 7, which recognizes inherent performance degradation at higher altitude. System contract specification requirements are for a single baseline delivery condition (level at 200 Ft/500 KCAS).

5/ The SFW will have a 0.79 system hardware reliability based on a conditional probability tree approach. Hardware reliability will be defined in terms of expected number of projectiles functioning divided by the number of projectiles available to function. Hardware reliability is a function of the reliability of the following systems that make up the SFW: SUU-66/B TMD, KHU-488/B, BLU-108/B submunition (10 each), and the projectile (40 each).

6/ Average release of four weapons/pass versus Representative Armored Formation target set. Includes mobility, firepower, or catastrophic kill categories. This number represents the average expected performance of all dive and level deliveries for multiple countermeasures for a countermeasured environment as defined in the System Threat Assessment Report, dated May 3, 1991. This average is based on the compilation of multiple delivery alltitudes as specified in the 7 November 1991, System Operational Requirements Document, Requirements Correlation Matrix note 4 and 7, which recognize inherent performance degradation at higher altitude.

Source: Defense Acquisition Executive Summary, November 25, 1994. This information is based on operational requirements document and acquisition program baseline as reported in the SFW Selected Acquisition Report, December 31, 1994.

Appendix I. Wind Corrected Munitions Dispenser

The Wind Corrected Munitions Dispenser (WCMD) is a modification to the direct attack cluster munitions:

- o Sensor Fuzed Weapon (CBU-97),
- o Gator (CBU-89), and
- o Combined Effects Munition (CBU-87).

The WCMD consists of a low-cost inertial navigation element and a method to control fin movement to provide mid-course wind correction. The modified tail assembly contains an inertial navigational element, fin actuator system, movable fins, and an electrical interface to the aircraft. The controllable fins will replace tail assemblies on the CBU-97, the CBU-89, and the CBU-87.

The intent of the WCMD is to correct for effects of launch transients, ballistic errors, and unknown winds between the release point and the dispenser's functioning point. The WCMD will allow both fighter and bomber aircraft to employ the WCMD from a wide range of altitudes and adverse weather conditions, while using various tactics such as dive bombing, toss bombing, and bombing on coordinates.

The need for a WCMD evolved from deficiencies identified in unguided munitions during Operation Desert Storm. Approximately one-third of attack sorties were ineffective due to adverse weather conditions. Also, heavy ground fire and anti-aircraft artillery forced a large percentage of sorties to fly and release their weapons at higher than optimum altitudes.

Direct attack weapons such as cluster munitions require target overflight or close proximity employment. Delivery aircraft are unduly exposed to target area threats and may be restricted by adverse weather. Additionally, these weapons are susceptible to wind-induced errors not measured and compensated by the delivery aircraft. This error becomes more pronounced at release altitudes that are more than 5,000 feet above the target.

The WCMD is to be as effective from mid- to high-altitude releases as at low altitudes. Delivery altitudes can vary from 200 feet above ground level to 45,000 feet above mean sea level. The WCMD will steer to the optimum dispensing point to achieve maximum coverage on the designated target. The WCMD is expected to deliver the munition within 100 feet of the target. Once

released, the WCMD will be autonomous, receiving no further steering information from the aircraft. The WCMD will not be able to track moving targets and will be most effective against stationary targets. The CBU dispensed submunition will be capable of killing moving targets within the munitions coverage area.

The WCMD is a DoD Acquisition Category II program managed by the Air Force. Total program cost is estimated to be $1.5 billion. The Air Force intends to procure about 40,000 WCMDs at a unit cost of approximately $37,000.

Appendix J. Initial Operational Tests

Altitudes Tested	IOT&E 1[1]	IOT&E 2[2]
Altitude (in feet)	Quantity	Quantity
295-400	9	2
401-500	3	0
501-600	5	0
601-700	8	0
701-800	0	2
801-900	0	0
901-1,000	2	0
1,001-2,000	4	4
2,001-3,000	1	2
3,001-4,000	1	0
4,001-5,000	0	0
5,001-6,000	0	0
6,001-7,000	0	0
7,001-8,000	0	0
8,001-9,000	1	0
9,001-10,000	1	0
> 10,000	0	0
Total	**35**	**10**

Note: 93 percent of combined IOT&E 1 and 2 test articles delivered at 3,000 feet or less.

[1]Sensor Fuzed Weapon IOT&E Phase 1 Final Report, March 1992.
[2]Sensor Fuzed Weapon IOT&E Phase 2 Test Plan, September 1994.

Appendix K. Analysis of Changes in Cost and Operational Effectiveness Analysis Concepts

Key Concept	Substantial Change	Discussion
Mission needs, deficiencies, and opportunities	No	This analysis is normally performed for Milestone I, Concept Demonstration Approval, and Milestone II, Development Approval. The primary scenario used in the 1991 analysis is consistent with the current Defense Planning Guidance.
Threats	Partly	The threat analysis determines those elements against which the system is to be employed and the forces that could be used against the system. The targets against which the SFW was to be employed are essentially unchanged since the 1991 COEA.
Operational concept	Yes	The operational concept defines how the system would be employed in battle and addresses both doctrine and tactics. The present COEA assumes that the primary tactic would be a low-level fighter delivery. Since 1991, all three Air Force bombers have been added to the list of delivery platforms and reliance on low-level deliveries has diminished based on experience in Operation Desert Storm.

Key Concept	Substantial Change	Discussion
Operational environments	Partly	The evaluation of the operational environment addresses the potential contribution of allied forces, the environment in which the system will be employed, and the operational threat environment. The operational environment has changed somewhat in that the operational concept and the operating parameters for employment have changed. The original COEA baseline case used a general tactic of low-level ingress, minimum exposure single-pass attack, and low-level egress. The addition of bombers, less reliance on low-level deliveries, and deficiencies in medium altitude capability require re-consideration.
Constraints and assumptions	Yes	These factors limit the set of viable alternatives considered in the analysis. The present COEA assumed low-level deliveries, as noted above; performance factors that were derived from testing up to November 1991; and countermeasure assessments that were limited to those that already existed. Additional countermeasures testing is scheduled as part of IOT&E 2 in 1995. Another constraint change was the substantial reductions in the Defense Budget. The quantity reductions from 16,928 to 5,000 units was largely driven by budget constraints.

Appendix K. Analysis of Changes in Cost and Operational Effectiveness Analysis Concepts

Key Concept	Substantial Change	Discussion
Functional objectives	Partly	Functional objectives describe, in quantitative terms, the tasks a system is expected to perform. As of January 6, 1995, the user had proposed changes regarding the maximum delivery altitude and the expected kills per pass for employment in a countermeasures environment.
Alternatives	Yes	Establishing the set of alternatives considers current systems and improved versions, along with systems in development by other Services or Allies and conceptual systems not yet on the drawing board. The present COEA does not consider either the Wind Corrected Munitions Dispenser for the SFW, Combined Effects Munition, or the Joint Stand Off Weapon (BLU-108/B version).
Models	Partly	Models used in cost and operational effectiveness analyses estimate how a particular system would function. The circumstances with models have changed in that the performance parameters of the WCMD corrected SFW, Combined Effects Munition, and the Joint Stand Off Weapon should be modeled in a updated COEA.

Key Concept	Substantial Change	Discussion
Data for analysis	Yes	The data used in the analysis must be current, accurate, and technically and operationally validated by engineering assessments, technical tests, and operational tests. Additionally, the current tactical and employment doctrine must be reflected in the analysis data. Since the present analysis was completed, additional testing has been performed that should be used to update the effectiveness measures used in the calculations of kills per pass. Perhaps the most significant change is the aircraft attrition rates used for the analysis. The cost-effectiveness calculations are highly dependent on attrition rates; changes in tactics based on the Operation Desert Storm experience are likely to have a more significant effect on cost-effectiveness calculations.
Measures of effectiveness	Yes	Measures of effectiveness assist in discriminating among alternatives. They show how the alternatives compare in meeting functional objectives and mission needs. The comparisons used in the November 1991 COEA present two basic measures of effectiveness. The first is operational impact or the number of targets killed per pass and the second is the cost-effectiveness, as measured by total cost per kill. The changes noted under "cost" need to be re-evaluated to address the cost-effectiveness of the SFW.

Appendix K. Analysis of Changes in Cost and Operational Effectiveness Analysis Concepts

Key Concept	Substantial Change	Discussion
Costs	Yes	Decisionmakers must combine cost considerations with assessments of operational effectiveness and potential constraints. The cost estimate is required to consider program quantities and cost sensitivity. The original COEA was based on 16,928 units with a unit cost of $146,000. After the analysis was completed, the program was restructured to $195,000 per unit and 10,000 units. The revised program was considered in an appendix to the COEA. Since November 1991, however, the quantity has decreased to 5,000 units at an estimated unit cost of $241,000, which represents an increase of 65 percent over the baseline COEA cost. All costs are in FY 1991 dollars.
Trade-off analyses	Partly	Trade-off analysis describes equal cost or equal capability packages; that is, they display the implications of "trading" one set of controllable variables, such as schedule or performance, for another such as cost. To identify trade offs, areas of uncertainty must be identified, sensitivity analysis conducted, and thresholds established. The equal cost and equal capability analyses in the present COEA were based on modeling three attrition rates based on three scenarios. As noted in "Data for analysis," attrition rates represent one of the most important changes that have occurred since the original analysis. The changes can be expected to have a significant effect on the results; whether the changes in results are sufficient to change the cost-effectiveness conclusions requires an updated analysis.

Appendix L. Summary of Potential Benefits Resulting From Audit

Recommendation Reference	Description of Benefit	Amount and/or Type of Benefit
A.1.	Compliance with Regulations. Provides a component breakout plan.	Nonmonetary.
A.2.	Compliance with Regulations. Provides that a component breakout review identifies all components eligible for component breakout.	Funds put to better use. Air Force could put to better use as much as $77 million* over the Future Years Defense Program. (FYs 1996 through 2001, Weapons Procurement, Air Force, Program Element 27320F).
A.3.	Compliance with Regulations and Economy and Efficiency. Provides that the results of the component breakout review are used for future production buys.	See A.2.
B.1.a.	Compliance with Regulations. Revises the Operational Requirements Document and the Requirements Correlation Matrix to require the same delivery envelope parameters.	Nonmonetary.

*This benefit will be offset by Government costs incurred for contracting and technical personnel support when component breakout occurs. Also, an additional $12 million could be put to better use by breaking out the components for the FY 2002 procurement of 600 units ($14.5 million adjusted for inflation in FY 1995 dollars).

Recommendation Reference	Description of Benefit	Amount and/or Type of Benefit
B.1.b.	Compliance with Regulations. Revises the Operational Requirements Document and Requirements Correlation Matrix for specific multiple kills per pass for delivery envelopes at low, medium, and high-altitude release regimes.	Nonmonetary.
B.2.a.	Compliance with Regulations. Revises the Acquisition Program Baseline performance characteristics parameters to agree with Recommendation B.1.a. and B.1.b. revisions.	Nonmonetary.
B.2.b.	Compliance with Regulations. Revises the Selected Acquisition Report to comply with DoD guidance.	Nonmonetary.
B.2.b(1)	Compliance with Regulations. Revises the Selected Acquisition Report's Section 7, "Program Highlights," to include current operational delivery limitations for medium- to high-altitude releases.	Nonmonetary.
B.2.b(2)	Compliance with Regulations. Revises the Selected Acquisition Report's Section 10, "Performance Characteristics," to include revised Acquisition Program Baseline delivery envelope thresholds to clarify the footnotes for multiple kills per aircraft pass for low, medium, and high-altitude release regimes.	Nonmonetary.
B.2.c.	Compliance with Regulations. Submits a revised Selected Acquisition Report with accurate program information to Congress.	Nonmonetary.

Recommendation Reference	Description of Benefit	Amount and/or Type of Benefit
B.3.	Compliance with Regulations. Reviews the Acquisition Program Baseline, Operational Requirements Document, and Requirements Correlation Matrix for consistency and accuracy in stating the system's performance characteristics.	Nonmonetary.
B.4.	Compliance with Regulations. Reviews the Selected Acquisition Report quarterly update to ensure Congress is being fully informed and to comply with DoD guidance.	Nonmonetary.
C.	Compliance with Regulations and Economy and Efficiency. Reviews, updates, and incorporates the changes in key concepts of the Cost and Operational Effectiveness Analysis including employment tactics, emphasis on bombers, and changes in attrition rates and unit costs.	Nonmonetary.
D.1.	Compliance with Regulations and Economy and Efficiency. Validates, verifies, and accredits the Nonnuclear Consumables Annual Analysis models.	Nonmonetary.
D.2.	Economy and Efficiency. Directs the use of effectiveness data for multiple kills that is consistent with information from tests and modeling.	Nonmonetary.
D.3.	Economy and Efficiency. Provides that the Nonnuclear Consumables Annual Analysis calculations include catastrophic kills consistent with the percentage of catastrophic kills achieved in testing.	Nonmonetary.

Recommendation Reference	Description of Benefit	Amount and/or Type of Benefit
D.4.	Economy and Efficiency. Recalculates the Nonnuclear Consumables Annual Analysis inventory requirements not later than the FY 1997 Program Objective Memorandum cycle.	Unquantifiable. The potential benefits cannot be determined until the model corrections are made and requirements recalculated.

Appendix M. Organizations Visited or Contacted

Office of the Secretary of Defense

Office of the Under Secretary of Defense for Acquisition and Technology, Washington, DC
- Director, Tactical Systems, Washington, DC

Director, Operational Test and Evaluation, Washington, DC

Director, Program Analysis and Evaluation, Office of the Under Secretary of Defense (Comptroller), Washington, DC

Office of the Joint Staff

Director, Force Structure, Resource, and Assessment, Washington, DC

Department of the Air Force

Secretary of the Air Force, Washington, DC

Office of the Assistant Secretary of the Air Force (Acquisition), Washington, DC
- Office of the Deputy Assistant Secretary of the Air Force (Management Policy and Program Integration), Washington, DC
- Director, Fighter, C2, and Weapons Programs, Washington, DC
- Program Executive Office Organization (Conventional Strike Programs), Washington, DC

Office of the Assistant Secretary of the Air Force (Financial Management and Comptroller), Washington, DC

Deputy Chief of Staff, Plans and Operations, Washington, DC
- Directorate of Forces (Weapons Division), Washington, DC
- Directorate of Modeling, Simulation, and Analysis (Technical Division), Washington, DC

Deputy Chief of Staff, Logistics (Combat Support Division), Washington, DC

Air Force Test and Evaluation Directorate, Washington, DC

Air Combat Command, Langley Air Force Base, VA

Air Force Materiel Command, Aeronautical Systems Center, Wright-Patterson Air Force Base, OH
- Systems Program Office, Eglin Air Force Base, FL
- Systems and Analysis Division, Eglin Air Force Base, FL

Air Force Operational Test and Evaluation Center, Kirtland Air Force Base, NM
- Air Force Operational Test and Evaluation Center, Detachment 2, Eglin Air Force Base, FL

Air Force Audit Agency Area Office, Eglin Air Force Base, FL

Department of the Army

Training and Doctrine Command, Fort Monroe, VA
Industrial Operations Command, Army Materiel Command, Alexandria, VA
Armament, Munitions, and Chemical Command, Rock Island, IL
Kansas Army Ammunition Plant, Parsons, KS

Other Government Organizations

Defense Logistics Agency, Alexandria, VA
- Defense Contract Management Area Operations, Atlanta, GA
- Defense Contract Management Area Operations, Hercules Resident Office, Pittsburgh, PA
- Defense Contract Management Area Operations, Notarial Resident Office, Phoenix, AZ
- Defense Contract Management Area Operations, Olin Resident Office, Seattle, WA
- Defense Contract Management Area Operations, Wichita, KS
- Defense Plant Representative Office, Honeywell/Alliant Techsystems, Edina MN
- Defense Plant Representative Office, Textron Defense Systems, Wilmington, MA

Contractors

Day and Zimmermann, Incorporated, Defense Systems Group, Parsons, KS
Eagle-Picher Industries, Incorporated, Electronics Division, Joplin, MO
Hercules Aerospace Company, Rocket Center, WV
Olin Aerospace Company, Redmond, WA
Textron Defense Systems, Wilmington, MA

Appendix N. Report Distribution

Office of the Secretary of Defense

Under Secretary of Defense for Acquisition and Technology
  Director, Defense Logisitics Studies Information Exchange
Under Secretary of Defense (Comptroller)
  Deputy Chief Financial Officer
  Deputy Comptroller (Program/Budget)
Director, Operational Test and Evaluation
Assistant Secretary of Defense (Public Affairs)

Department of the Army

Auditor General, Department of the Army

Department of the Navy

Assistant Secretary of the Navy (Financial Management and Comptroller)
Auditor General, Department of the Navy

Department of the Air Force

Assistant Secretary of the Air Force (Acquisition)
Assistant Secretary of the Air Force (Financial Management and Comptroller)
Air Force Materiel Command, Aeronautical Systems Center, Wright-Patterson Air Force Base
  Area Attack Systems Program Office, Eglin Air Force Base
Air Combat Command, Director of Requirements, Langley Air Force Base
Auditor General, Department of the Air Force

Other Defense Organizations

Director, Defense Contract Audit Agency
Director, Defense Logistics Agency
Director, National Security Agency
  Inspector General, National Security Agency

Non-Defense Federal Organizations

Office of Management and Budget
Technical Information Center, National Security and International Affairs Division, General Accounting Office
Chairman and ranking minority member of each of the following congressional committees and subcommittees:
- Senate Committee on Appropriations
- Senate Subcommittee on Defense, Committee on Appropriations
- Senate Committee on Armed Services
- Senate Committee on Governmental Affairs
- House Committee on Appropriations
- House Subcommittee on National Security, Committee on Appropriations
- House Committee on Government Reform and Oversight
- House Subcommittee on National Security, International Affairs, and Criminal Justice, Committee on Government Reform and Oversight
- House Committee on National Security

Part IV - Management Comments

Office of the Under Secretary of Defense Comments

Final Report Reference

OFFICE OF THE UNDER SECRETARY OF DEFENSE

3000 DEFENSE PENTAGON
WASHINGTON DC 20301-3000

ACQUISITION AND TECHNOLOGY

25 MAY 1995

MEMORANDUM FOR DIRECTOR, ACQUISITION MANAGEMENT DIRECTORATE, DoD INSPECTOR GENERAL

SUBJECT: DoD IG Draft Audit Report on the Acquisition of the Sensor Fuzed Weapon (Project No. 4AS-0047)

We reviewed your draft report of March 28, 1995, and the following comments are provided on two recommendations, B.3.a and B.3.b, for your consideration in preparing the final audit report.

Renumbered as Recommendation B.3.

Recommendation B.3.a: "We recommend that the Under Secretary of Defense for Acquisition and Technology review the revised Sensor Fuzed Weapon Acquisition Program Baseline document, the revised Operational Requirements Document, and the revised Requirements Correlation Matrix document for consistency and accuracy in stating the system's operational performance characteristics."

OUSD(A&T) Response: The SFW program is no longer a DAB program, and its acquisition authority has been delegated to the Air Force per the PDUSD(A&T) memorandum of November 16, 1994. The Air Force is now responsible for the Milestone III decision of this program, and we understand that the aforementioned documents will be revised and reviewed in support of the planned Milestone III review by the Air Force. We, therefore, suggest that you task this recommendation to the Air Force Acquisition Executive instead of USD(A&T).

Renumbered as Recommendation B.4.

Recommendation B.3.b: "We recommend that the Under Secretary of Defense for Acquisition and Technology review the revised Selected Acquisition Report (SAR), December 31, 1994, quarterly update to ensure Congress is accurately informed on the program status of the SFW program and that the report complies with DoD Manual 5000.2-M, Part 17, "Selected Acquisition Report," guidance.

OUSD(A&T) Response: The Air Force submitted a draft December 1994 SAR for the SFW program to OSD on March 1, 1995. The draft SAR was revised to include comments from OSD staff, and the final SAR was submitted to the Congress on April 7, 1995. We believe that we have accurately informed Congress on the SFW

program as well as on other programs, and that we have appropriately complied with the guidance of DoD Manual 5000.2-M. Since the action proposed under this recommendation has been completed, the recommendation should be deleted in its entirety.

If you have any questions, please contact Mr. S. Young Shin, at (703) 693-2984.

I. N. Blickstein
Director, Acquisition Program
Integration

2

Final Report Reference

OFFICE OF THE UNDER SECRETARY OF DEFENSE

3000 DEFENSE PENTAGON
WASHINGTON DC 20301-3000

ACQUISITION AND TECHNOLOGY

MAY 1 8 1995

MEMORANDUM FOR INSPECTOR GENERAL FOR THE DEPARTMENT OF DEFENSE

THROUGH: CONGRESSIONAL ACTIONS AND INTERNAL REPORTS DIVISION

SUBJECT: Comments on Draft of a Proposed Audit Report, "Acquisition of the Sensor Fuzed Weapon."

Recommendation Deleted

Thank you for the opportunity to review the subject draft audit report. This office was asked to review and comment on Finding D (Inventory Requirements), Recommendation for Corrective Action number 1. The recommendation requests the Under Secretary of Defense for Acquisition and Technology direct the Joint Technical Coordinating Group (JTCG) to update the Joint Munitions Effectiveness Manual (JMEM) to reflect a catastrophic kill capability for the Sensor Fuzed Weapon (SFW), in addition to existing mobility and firepower kills. The subject report concludes failure to consider catastrophic kills in Nonnuclear Consumable Annual Analysis (NCAA) modeling causes the Air Force to plan procurement for Sensor Fuzed Weapons in excess of real needs.

The draft report recommendation is somewhat premature because until a system is fielded, a JMEM is not released. In the case of SFW, release of a draft JMEM is anticipated in late calendar year 1996. Presently JTCG personnel have only draft SFW material provided by the System Program Office, which is the starting point from which a SFW JMEM will be prepared. A catastrophic kill category is not addressed in this draft material.

Discussions with JTCG personnel indicate there is little problem (but somewhat more work) in including a catastrophic kill criteria in the SFW JMEM, and, in fact, it will be included automatically if the testing data base indicates catastrophic kills are significant. Under JTCG standard test assessment procedures, mobility, firepower, and catastrophic kills are all routinely calculated and provided as test data, regardless of the kill mechanisms called out in the weapon JMEM. To date, catastrophic kills have not been addressed because the focus of SFW has been on mobility kills, and few catastrophic kills are anticipated against armored vehicles. The JTCG approach is to collect, assess, and incorporate data into a JMEM as it becomes available. For SFW, over a period of time it will become clear whether including catastrophic kills in planning acquisition quantities is advisable, or counter-

productive. This will become apparent in sufficient time to impact acquisition planning if necessary.

Presently the SFW data base is very small. Also, it has been directed toward targets representative of only a few specific vehicle types at this time. Limited data available could suggest no catastrophic kill capability against one type of armored vehicle, and some against another, but the quantity and character of testing do not support clear-cut conclusions. Further, the effect of countermeasures on weapon effectiveness is only now being tested. Therefore, measured occurrence of catastrophic kills in relation to other kill mechanisms may change significantly before the weapon is fielded.

The JTCG approach automatically includes the action suggested by the draft report if test data demonstrate catastrophic kills to be a significant part of target kills. I suggest the recommended action of the draft report be deleted, as it is redundant to JTCG methodology for generating and maintaining a JMEM document.

George R. Schneiter
Director
Strategic and Tactical Systems

Department of the Air Force Comments

DEPARTMENT OF THE AIR FORCE
WASHINGTON DC

OFFICE OF THE ASSISTANT SECRETARY

26 MAY 1995

MEMORANDUM FOR ASSISTANT INSPECTOR GENERAL FOR AUDITING, OFFICE OF THE INSPECTOR GENERAL, DEPARTMENT OF DEFENSE

FROM: SAF/AQ
1060 Air Force Pentagon
Washington, DC 20330-1060

SUBJECT: Air Force Response to DOD IG Draft Report Entitled " Acquisition of the Sensor Fuzed Weapon" (Project No. 4AS-0047)

This memorandum replies to your request for Air Force comments on the subject report. We have carefully reviewed the subject audit and non-concur with the following three audit findings:

a. Finding B: the SFW requirement is correctly stated as the average performance over representative employment scenarios. Unguided ballistic weapons are not as accurate from high altitudes as low altitude and this is addressed in the SFW System Operational Requirements Document.

b. Finding C: the Air Force meets the intent of the DOD 5000 requirement to accomplish a Cost and Operational Effectiveness Analysis (COEA) to support a milestone decision. The original SFW COEA along with a thorough review of its conclusions in addition to the results of the Joint Standoff Weapon (JSOW) COEA are sufficient to support the SFW MS III review.

c. Finding D: the SFW procurement objective is well below the current Air Force inventory requirement. The audit's recommendation for changes in modeling methods would have no impact on the current SFW procurement objective.

Thank you for this opportunity to review your draft report. We look forward to reviewing the summary report that will address our concerns with your initial findings.

DARLEEN A. DRUYUN
Acting Assistant Secretary
of the Air Force (Acquisition)

Attachment:
Comments on Audit

Detailed Comments on
DOD IG Report:
"Acquisition of Sensor Fuzed Weapon"

A. Component Breakout: *"The Sensor Fuzed Weapon program has not performed a comprehensive component breakout review since 1991 to support the procurement acquisition strategy."*

Finding: - Concur:

The Air Force will re-accomplish a component breakout analysis and provide a recommendation on the results at the SFW Milestone III (MS III) Full Rate Production (FRP) decision. The Air Force has no data at this time to substantiate or rebut audit's cost savings. A complete assessment of the cost savings projected in this finding will not be available until the component breakout analysis is completed. To be more exact, each component would have to incorporate the effects of learning, production rate, etc., to more accurately estimate future costs impacted by the prime contractor's wrap rates. Costs associated with government management of the component breakout would need to be estimated and subtracted from the raw savings suggested in the audit. Additionally, to complete the comparison, a risk analysis would need to be incorporated to effectively evaluate potential net cost savings. Any problems with Government Furnished Equipment resulting in a production line shutdown could quickly offset potential savings.

Recommendation 1. - Concur: The Air Force will conduct a component breakout analysis to support the SFW MS III review.

Recommendation 2. - Concur: The Air Force will conduct a component breakout analysis in accordance with the Defense Acquisition Regulation Supplement, Appendix D, "Component Breakout."

Recommendation 3. - Concur: The Air Force will breakout those components that result in the Air Force having the ability to realize cost savings with acceptable risk. This analysis will represent best value to the Air Force.

B. Operational Requirements: *"The Sensor Fuzed Weapon Acquisition Program Baseline key performance parameters were inconsistent with the Requirements Correlation Matrix of the Operational Requirements Document."*

Finding: Non-concur

The fundamental SFW requirement is to achieve a multiple kills-per-aircraft-pass capability against Land Combat Vehicles (LCV) with a delivery envelope from 200 to 20,000 feet. Since the requirement is statistically based, the SFW performance must be evaluated against an average number of kills from a variety of representative delivery conditions. Any attempt to quantify specific kill requirements for multiple delivery conditions would prevent an accurate

evaluation of weapon effectiveness and over specify the requirement. The weapon is expected to achieve multiple kills per pass from medium and high altitude; however, the number of kills is expected to be less than the kill at low altitude (Recall, the requirement is based on a desire to improve Air Force capability over that achieved with single-shot-per-pass weapons like Maverick and the GBU-10/12/24).

Furthermore, the purpose of the Acquisition Program Baseline (APB) is to maintain a standard against which the program will be judged through its development life and prevent requirements creep--a primary cause of system cost growth. Any attempt to modify the requirement at this time by imposing kill performance as a function of employment altitude or new altitude regimes for a system as mature as SFW is inappropriate as it defeats the purpose of the APB.

The Air Force has been completely open and accurate with information about SFW. The Air Force has ensured the Congress and the congressional staff are well aware of the short comings of medium to high altitude employment of a ballistic SFW through numerous staffer briefings and Congressional testimony. No misleading information has ever been provided to Congress or OSD about the performance of SFW.

Recommendation 1.a. - Non-concur: The requirement is correctly stated as the average number of kills for a specific aircraft weapon load out and delivery conditions. The weapon is expected to achieve this average through a variety of delivery conditions. A set of representative delivery conditions (200, 300, 400, 500, 1000, 1800, 3000, and 8500 feet; up to ±45 degrees attitude; 480, 540, and 600 KCAS) were chosen to evaluate the performance of the weapon. Range safety considerations also limit the release of live ordnance.

The Air Force recognizes the advantages of employing SFW from high altitude; however, performance in this regime was not part of the original requirement. The Wind Corrected Munitions Dispenser (WCMD) Kit will improve SFW performance when employed from medium to high altitude and will be used when weapons are employed from 10,000 feet and above. Also, the audit incorrectly defines medium to high altitude as 5,000 to 25,000 feet.

Recommendation 1.b. - Non-concur: See recommendation 1.a. above.

Recommendation 2a. - Concur: The SFW Acquisition Program Baseline will be revised to reflect the information in the Requirements Correlation Matrix (RCM) section of the System Operational Requirements Document (SORD) to support the MS III review.

Recommendation 2.b (1). - Non-concur: Information regarding operational capabilities at medium to high altitude is address in Section 10, Performance Characteristics, footnote 4. This information is not addressed in program highlights because program requirements have not changed since program inception and the weapon system continues to meet ORD requirements.

Recommendation 2b (2). - Non-concur: Section 10 of the December 31, 1994 Selected Acquisition Report (SAR) was modified to address the issue regarding kills per pass

Final Report Reference

measurement. Footnote 4 was clarified to explain how the performance average is computed across multiple delivery altitudes.

Recommendation 2c. - Non-concur: The December 1994 SFW SAR does not need to be updated as it is correct and accurate. Adequate mechanisms are in place to inform Congress of the status of the SFW program. Quarterly the program office provides a written response on the status of the program and whether a program breach has occurred due to fact-of-life changes. A SAR is submitted to Congress if there is a reportable breach of cost, schedule, or performance characteristics. Other mechanisms are available and used by congressional staffers to collect additional information about a given program. For instance, the staffs of each of the congressional defense committees have been briefed on the requirement and the status of the WCMD Kit program. There is no issue with SFW performance to warrant quarterly, out of cycle SARs. Any improvements in medium to high altitude performance will not occur until the Wind Corrected Munitions Dispenser (WCMD) Kit is retrofitted onto the SFW latter this decade--quarterly status reports would provide no new additional information to Congress until the WCMD Kit is available.

Recommendation 3.a & 3.b. - Non-concur: Please refer to the responses to recommendation 2.

Renumbered as Recommendatio B.3 and B.4.

C. **Cost and Operational Effectiveness Analysis:** *"The Sensor Fuzed Weapon's Cost and Operational Effectiveness Analysis, November 1991, did not provide adequate decision making information because the analysis factors changed significantly."*

Finding: - Non-concur

The Air Force has met the intent of the DOD 5000 requirement to accomplish a Cost and Operational Effectiveness Analysis (COEA) to support a milestone decision since the analysis factors have not changed significantly. The SFW COEA is broad enough in scope such that the weapon's cost and current operational concept of operations are contained within the original analysis. Furthermore, the results of the Joint Standoff Weapon (JSOW-BLU-108/B) COEA are available to the MS III decision authority and complement the SFW COEA. DOD 5000 does not require all analyses to be contained in a single report. Also, the Air Force will review the SFW COEA in support of the MS III review to ensure the current analysis factors have not changed the fundamental conclusions of the original SFW COEA.

Recommendation. - Non-concur: The SFW COEA includes numerous sensitivity and excursion analyses. These analyses were performed to provide information on impacts due to changes in cost, tactics, threat, and measures of effectiveness. The COEA also examines SFW performance in an Operation Desert Storm conflict and the scenarios are based on inputs from actual participants in the war. The sensitivity and excursion analyses cover a range of weapon costs, employment altitudes, threat environments, and regional conflicts. The SFW and JSOW COEAs together provide sufficient information about the analysis factors relevant to the current SFW acquisition strategy and operational employment concept.

For instance, both studies include analyses about the Combined Effects Munitions (CEM) although the audit states: *"The present COEA does not consider either the Wind Corrected*

Munitions Dispenser for the SFW, Combined Effects Munition, or the Joint Standoff Weapon..." The JSOW COEA also provides an analysis of a ballistic SFW and SFW fitted with the Wind Corrected Munitions Dispenser (WCMD) Kit. Furthermore, CEM has a smaller footprint and less armor penetrating capability than SFW, and therefore, a very limited capability, if any, against heavy armor and can not be considered an SFW replacement. The limited armor killing capability of CEM is well documented.

The audit states: *"The original COEA was based on 16,928 units with a unit cost of $146,000 (FY 91$)."* Section VII.D of the SFW COEA includes a sensitivity analysis of SFW costs and its trends show SFW is still the most cost effective alternative given the current acquisition strategy. The conclusion is further supported by an ACC/XP-JSG assessment which included (a) an increase in the SFW average unit cost due the reduction to a 5,000 weapon procurement objective, (b) Desert Storm like scenarios, and (c) weapon effectiveness based on test performance. The ACC/XP-JSG study concluded: *"Changes in cost per kill due to a procurement strategy change are not significant....The program can absorb the reduction in quantities procured...However, there is a requirement for SFW and the TAF [Tactical Air Forces] cannot afford elimination of the program from a required capability point of view."*

The purpose of the JSOW COEA was to assess the benefits of a standoff anti-LCV capability--not compete a standoff weapon with a direct attack weapon as suggested by the audit. The JSOW COEA also includes an assessment of a ballistic SFW and SFW fitted with the WCMD Kit. The JSOW COEA does not *"dispute the conclusions in the SFW COEA;"* rather it shows the benefits of a standoff anti-LCV capability in scenarios where aircraft attrition is high. The aircraft attrition rates are different for SFW and JSOW COEAs as the SFW scenario is in the 1998 time frame and the JSOW scenario is for 2010. The difference in time frames represents the maturity level of the two weapons and the ability to evade a more effective threat.

Furthermore, the purpose of a COEA is not to determine the inventory requirements for various weapons; it provides an indication of the benefits, if any, of a potential solution to specific operational deficiency and a selected solution is compared to competing alternatives. The Air Force Non-Nuclear Consumable Annual Analysis (NCAA) is used to determine inventory requirements (see **D. Inventory Requirements** below). Finally, JSOW(BLU-108/B) is not a competing alternative with SFW as it will not be available for Air Force operational employment until the year 2004.

Also, the Air Force is conducting a review of the SFW COEA to determine if changes in the analysis factors impact the conclusions of the original analysis. This review will also make excursions on the original SFW COEA to include an assessment of SFW fitted with the WCMD Kit and bomber employment of SFW. The results of which will be provided at the SFW MS III review.

The results of the SFW COEA are further sustained by the conclusions of national strategy studies by the Rand Corporation and the Institute for Defense Analysis Bomber Force Study. These studies conclude CONUS based bombers carrying SFW are capable of halting an advancing

Final Report Reference

armor formation in a second major regional conflict. No additional validation of the original SFW COEA nor its operational requirement are required.

Because of the extensive analyses of the SFW and JSOW COEAs the cost and operational effectiveness of SFW is well documented and understood. Also, the SFW COEA review will provide additional scrutiny of the original analysis. There will be adequate and sufficient information to support the SFW FRP decision.

D. Inventory Requirements: *"The Air Forces acquisition objectives for Sensor Fuzed Weapon munitions are questionable."*

Finding: - Non-concur

The fundamental requirement for SFW is to provide a multiple kills per aircraft pass capability against all Land Combat Vehicles including heavy armor, light armor, armored personnel carriers, self propelled armor, and trucks. The weapon is not required to discriminate targets. The requirement allows for either mobility, fire power, or catastrophic kills with irreparable damage to the vehicle's engine compartment the most typical type of damage inflicted on the target. Catastrophic SFW kills typically occur if the Explosively Formed Penetrater enters the ammunition compartment. Although these events can occur, they represent a small percentage of SFW kills as the sensor is tuned to attack the engine compartment and the ammunition compartment is typically more heavily armored.

Given the vast number of LCVs in the Defense Planning Guidance scenarios, the SFW procurement objective is far less than the unconstrained Air Force inventory objective. The audit's recommendation for changes in the modeling assumptions, flight profiles, effectiveness data, and or VV&A will have no impact on the SFW procurement objective, which is now budget constrained.

Recommendation 1. - Non-concur: Mobility kills are the primary SFW kill mechanism. Catastrophic kills by SFW are the result of secondary effects--such as hitting fuel compartments or ammunition compartments--and account for a very small portion of the weapon's lethality. — Recommendati Deleted

Recommendation 2.a. - Non-concur: The SABSEL model which provides the calculations for weapons effectiveness is a composite of the Joint Munitions Effectiveness Manual (JMEM) open-end methods, the Joint Test and Evaluation program office Effectiveness Method, and Predictive Methods for weapon penetration. The JMEM open-end methods and penetration methods are currently being reviewed as indicated in the audit. SABSEL data are widely recognized as the best weapons effectiveness calculations available, and are used widely in the DOD and Joint Chiefs of Staff (JCS) analysis community. In addition, AF/XOFW is developing a new model to replace the Heavy Attack model in the NCAA process. This model will undergo the Verification, Validation, and Accreditation (VV&A) process as part of its development and SABSEL input data will be verified at the same time. — Renumbered as Recommendatic D.1.

Recommendation 2.b. - Concur: The delivery conditions and associated effectiveness data have been thoroughly reviewed and updated as a result of the information derived during this audit. All — Renumbered as Recommendatio D.2.

Final Report Reference

Audit Notes Follow On Pgs. 83-85

weapon delivery profiles are limited to less than 3000 feet in the models for SFW without Wind Corrected Munitions Dispenser (WCMD) Kits.

Renumbered as Recommendation D.3.

Recommendation 2.c. - Non-concur: All available information indicates that while SFW has the potential to produce a catastrophic kill, that is not it's intended or primary kill mechanism. The Air Force models catastrophic kills on these targets by using AGM-65 (Maverick). The target set is divided into both mobility and catastrophic kill categories and the resulting targets are attacked with the appropriate weapons for the type of kill required. Obviously there are instances when SFW achieves a K--kill and Maverick achieves a m-kill. We believe, however, the current methodology accounts for cross over of kills in an appropriate manner.

Renumbered as Recommendation D.4.

Recommendation 2.d. - Non-concur: The Air Force calculates its SFW requirements annually as part of the Non-Nuclear Consumables Annual Analysis (NCAA) process. The results of the FY 96 NCAA will be published in the summer of 1995.

Appendix A. Sensor Fuzed Weapon Subsystems Description:

Appendix B. Sensor Fuzed Weapon Subsystems Deployment Sequence:

Appendix C. Product Enhancement Program (PEP):

1 1. The SFW procurement objective was not reduced to 5,000 weapons as stated in the audit, rather the objective was reduced to allow for a 5,000 JSOW-BLU-108/B procurement objective.

2 2. The last sentence of the second paragraph should read: *"and delayed the design completion for the PEP 2 phase until May 1996."*

3 3. Change in PEP 1 section the parts reduction to *"from 222 to 128."*

4 4. Change in PEP 2 section the parts reduction to *"from 209 to 122."*

Appendix D. Areas Not Requiting Further Review: No comment.

Appendix E. Prior Audits and Other Reviews: No comment.

Appendix F. Candidates for Component Breakout: No comment.

Appendix G. Potential Monetary Benefits From Component Breakout: No comment.

Appendix H. Approved Performance Characteristics: No comment.

Appendix I. Wind Corrected Munitions Dispenser:

5 1. The title should read: *"Wind Corrected Munitions Dispenser Kit."*

Audit Notes
Follow On
Pgs. 83-85

6 2. Change the first sentence to read: *"(WCMD) Kit is a modification of the tails of direct..."*

7 3. Paragraph 2 should read: *"The modified tail assembly contains an inertial navigational element, fin actuator system, movable fins and an electrical interface to the aircraft to provide course correction. The new tail kit will replace existing tail assemblies on a portion of the Air Force inventory of CBU-97/89/87s."*

8 4. Paragraph 4, 1st sentence: replace *"Direct"* with *"Area."*

9 5. Paragraph 4: The statement *"This error becomes more pronounced at release altitudes that are more than 5,000 feet above the target"* contradicts the WCMD Kit Concept of Operations. The sentence should read as follows: *"This error becomes more pronounced as the release altitudes exceed 8,000 to 10,000 feet above the target."*

10 6. Paragraph 5, last sentence: Delete the last sentence--it is an incorrect statement. The CBU family of weapons can not track moving targets, but their submunitions, after dispense, are each capable of killing moving targets as each is a area weapon.

11 7. Paragraph 6, last sentence, change to read: *"The Air Force intends to procure 40,000 WCMD Kits at an average unit procurement cost of approximately $25,000 (BY 94)."*

Appendix J. Initial Operational Tests: No comment.

Appendix K. Analysis of Changes in Cost and Operational Effectiveness Analysis Concepts:

12 Operational Concept: *"Since 1991, all three Air Force bombers have been added to the list of delivery platform and reliance on low-level deliveries has diminished based on experience in Operation Desert Storm."*

The SFW COEA accomplished a detailed analysis of Operation Desert Storm. The SFW COEA did not cover bomber employment; however, the Air Force has no analytical information that suggests that bomber employment would contradict the conclusions of the original analysis--in fact we have every indication their inclusion will corroborate them. Additionally, bombers can not employ one of the SFW COEA alternatives--the Maverick missile.

13 Constraints and Assumptions:

Alternatives: *"The present COEA does not consider either the Wind Corrected Munitions Dispenser for the SFW, Combined effects Munition, of the Joint Standoff Weapon."*

This information is available in the JSOW COEA.

14 Data for Analysis: *"Since the present analysis was completed, additional testing has been performed. ... The cost effectiveness calculations are highly dependent on attrition rates;*

Audit Notes
Follow On
Pgs. 83-85

changes in tactics based on Operation Desert Storm experience are likely to have a more significant effect on cost effectiveness calculations."

As previously stated, the original SFW COEA included Operation Desert Storm like scenarios.

15 Measures of Effectiveness: *"The changes noted under the cost category need to be re-evaluated again to address the cost effectiveness of SFW."*

Sensitivity analyses on SFW unit cost were included in the original COEA.

16 Cost: *"The COEA was based on an SFW cost of $146,000 [BY 91] and was revised via appendix for an assumed SFW cost of $195,000. ...however, the quantity has decreased to 5,000 units at an estimated unit cost of $241,000..."*

The original SFW COEA included a sensitivity analysis on weapon cost that included the current estimated unit cost and shows the same results for SFW.

Appendix L. Summary of Potential Benefits: No comment.

Appendix M. Organizations Visited or Contacted: No comment.

Appendix N. Report Distribution: No comment.

Audit Notes

In the following notes, we respond to the Air Force's comments on the factual content of the report.

1. The SFW was reduced to 5,000 units (10 BLU-108s per unit) because of budget constraints and the start of the JSOW BLU-108 variant program in 1992. The effects of the JSOW BLU-108 variant production quantities (6 BLU-108s per JSOW dispenser) were incorporated in SFW cost estimates.

2. The final report reflects this comment.

3. The final report reflects this comment.

4. The final report reflects this comment.

5. The Wind Corrected Munitions Dispenser (WCMD) is a modification kit; however, the title of the program as stated on the September 23, 1994 Operational Requirements Document is "Wind Corrected Munitions Dispenser."

6. According to the WCMD Operational Requirements Document, the WCMD is a modification kit for CBU-87, 89, and 97 direct attack cluster munitions.

7. This paragraph was developed from statements in Air Combat Command's Concept of Operations for the WCMD, page 2.

8. Direct attack munitions are referred to in the WCMD Concept of Operations and the WCMD Operational Requirements Document.

9. The Concept of Operations for the WCMD does state that the wind-induced errors become more pronounced as release altitudes exceed 8,000 to 10,000 feet above the target. However, according to the WCMD Operational Requirements Document, direct attack cluster munitions have degraded accuracies when released from medium- to high-altitudes due to launch transients, ballistic errors, and undetected wind shifts not compensated by aircraft avionics.

Our statement in the report relating to medium- to high-altitude release (above 5,000 feet through 25,000 feet) is correct. The Air Combat Command provided the auditors with the altitude employment definitions based on the Multi-Command Manual 3-1, Volume I, Change 1, "Tactical Employment General Planning & Employment Considerations, (U)," June 1994. According to the manual, low-altitude employment is below 5,000 feet above ground level; medium-altitude employment is 5,000 feet above ground level to 25,000 feet mean sea level; and high-altitude employment is above 25,000 feet mean sea level.

10. The WCMD Operational Requirements Document states, "WCMD will not have the capability to track a moving object. It will be most effective against stationary targets." We have added a statement describing the capability of the submunitions to kill moving targets within a given area where the munition is released.

11. Both cost statements are correct. The unit cost of $37,000 is expressed in then-year rather than constant dollars and includes approximately $3,000 per unit in research and development costs. The program office provided these costs. The unit cost of $25,000 does not include research and development costs and is in constant 1994 dollars.

12. The latest SAR, Section 10, December 31, 1994, indicates in the Program Manager's Current Estimate that the SFW will be employed from the B-52H, B-1, and B-2 bombers. The Air Force response did not refer to any studies or analysis that confirm that bombers will support the original COEA cost effectiveness conclusion. However, the WCMD kit should provide the capability to release the SFW at medium- to high-altitudes for bomber missions.

13. The data analysis obtained about WCMD for the SFW and the Combined Effects Munition system during the JSOW COEA should be benefical for the SFW COEA review.

14. The COEA appendix did briefly address an Operation Desert Storm scenario. However, in a memorandum for the Chairman, Conventional System Committee, "Review of SFW Cost and Effectiveness Analysis," December 13, 1991, the Director of Program Analysis and Evaluation* concluded that the COEA attrition rates used appeared high based on Operation Desert Storm experience and also the demise of the Soviet Union threat in Europe. Discussions with Air Force personnel confirmed that the official Air Force aircraft attrition data base underwent major revision following Operation Desert Storm.

15. We agree that the COEA included sensitivity analysis on SFW unit costs in the 1991 COEA.

In a December 13, 1991, memorandum, "Review of SFW Cost and Effectiveness Analysis," the Director of Program Analysis and Evaluation stated that the Air Force acquisition strategy was revised in July 1991. Therefore, after the COEA was completed, the revised SFW cost estimates for a 10,000 buy (a 33 percent increase in unit cost) were addressed only within the cost sensitivities section in the body of the COEA. An appendix was added to address the 33 percent unit cost increase. The Director stated that the costs and methodology used in the body of the COEA were acceptable; however, "there are insufficient data for an assessment of the revised costs addressed in the COEA and further analysis is required."

16. The SFW Project Office developed a COEA estimate based on a $195,000 unit cost (FY 1991 budget) for a 10,000 unit buy that was used for the sensitivity analysis.

The COEA review should address the sensitivity analysis for kill effectiveness based on a SFW procurement unit cost of $241,000 (FY 1991 budget dollars)

*Formerly the Assistant Secretary of Defense (Program Analysis and Evaluation).

for a 5,000 buy and the additional WCMD procurement unit cost of $25,000 (FY 1994 budget dollars) associated with retrofitting 5,000 SFWs tactical munition dispensers. This updated procurement unit cost of $266,000 ($241,000 plus $25,000) represents a $71,000 unit cost increase over the $195,000 unit cost used in the 1991 COEA.

Audit Team Members

This report was prepared by the Acquisition Management Directorate, Office of the Assistant Inspector General for Auditing, Department of Defense.

Donald E. Reed
Robert K. West
John E. Meling
Michael H. Claypool
James A. Hoyt
Louis F. Schleuger
Harold R. Tollefson
Marvin E. Tuxhorn
Noble White
Mary Ann P. Hourclé
Claudia E. Boykin
Dr. Frank M. Ponti