Report No. DODIG-2014-111

Inspector General

U.S. Department of Defense

SEPTEMBER 8, 2014

Exoatmospheric Kill Vehicle Quality Assurance and Reliability Assessment – Part A

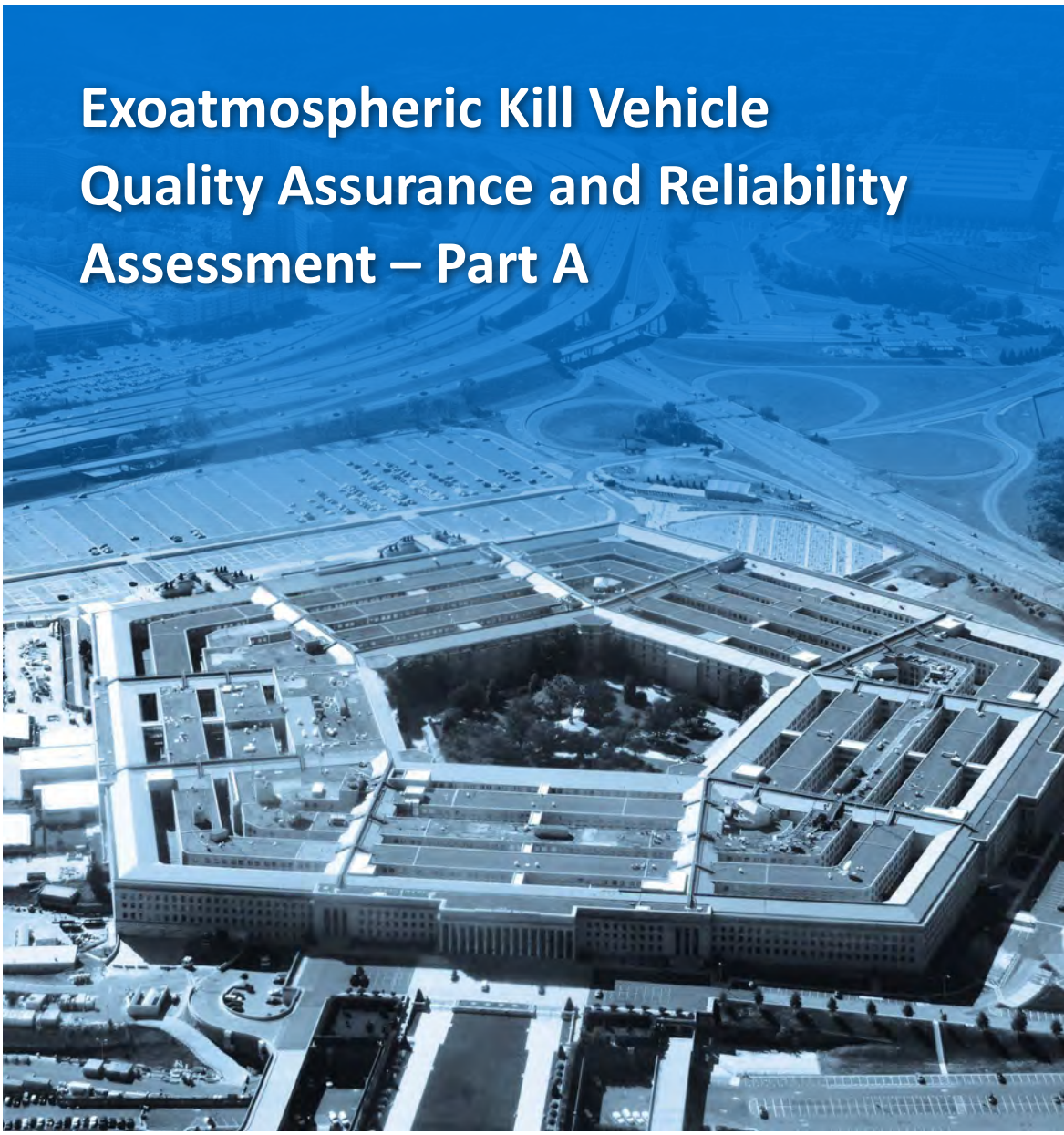

INTEGRITY ★ EFFICIENCY ★ ACCOUNTABILITY ★ EXCELLENCE

INTEGRITY ★ EFFICIENCY ★ ACCOUNTABILITY ★ EXCELLENCE

Mission

Our mission is to provide independent, relevant, and timely oversight of the Department of Defense that supports the warfighter; promotes accountability, integrity, and efficiency; advises the Secretary of Defense and Congress; and informs the public.

Vision

Our vision is to be a model oversight organization in the Federal Government by leading change, speaking truth, and promoting excellence—a diverse organization, working together as one professional team, recognized as leaders in our field.

Fraud, Waste & Abuse
HOTLINE
Department of Defense
dodig.mil/hotline | 800.424.9098

For more information about whistleblower protection, please see the inside back cover.

Results in Brief

Exoatmospheric Kill Vehicle Quality Assurance and Reliability Assessment – Part A

September 8, 2014

Objective

Our objective was to perform a quality assurance assessment of the Missile Defense Agency's Ground-Based Midcourse Defense, Exoatmospheric Kill Vehicle, which is procured from Raytheon Missile Systems via the prime contractor Boeing. Our assessment resulted in two separate reports.

Part A: Assess Raytheon conformity to Aerospace Standard (AS)9100C, "Quality Management Systems - Requirements for Aviation, Space and Defense Organizations," contractual quality assurance clauses, and internal quality assurance processes and procedures.

Part B: Assess the Exoatmpheric Kill Vehicle reliability of deployed assets. It will be released as a separate classified report.

Findings

The majority of quality management systems were in compliance. However, some areas need improvement:

A. Boeing and Raytheon were not ensuring that software development processes and testing were sufficient, which could result in reliability issues.

Visit us at www.dodig.mil

Findings (cont'd)

B. Boeing and Raytheon did not ensure all quality assurance and technical requirements for mission-critical assemblies flowed down to the supply chain and were verified. Therefore, it is uncertain that all supplier products will meet system, performance, and reliability requirements.

C. Boeing and Raytheon were not adhering to configuration management processes, specifically with respect to management of change processes for design requirements. This leads to some uncertainty in fielded configurations.

D. Missile Defense Agency, Boeing, and Raytheon were not ensuring that all quality management systems were in compliance with the AS9100C standard. We identified a total of 48 nonconformances that were violations of the AS9100C standard. These nonconformances could result in the production of nonconforming hardware and software which could effect mission success.

Recommendations

The Director, Missile Defense Agency, should:

A. Ensure software development processes are fully documented, implemented, and enforced throughout the Exoatmospheric Kill Vehicle supply chain.

B.1 Ensure all suppliers of critical items are identified as critical suppliers, receive the necessary contractual requirements, and requirements are verified throughout the supply chain.

B.2 Ensure fielded hardware affected by an insufficient Hardware Acceptance Review Checklist process is assessed for risk.

Results in Brief

Exoatmospheric Kill Vehicle Quality Assurance and Reliability Assessment – Part A

Recommendations (cont'd)

C. Ensure design and configuration changes do not circumvent the Missile Defense Agency Assurance Provisions for configuration management.

D. Conduct an effective root cause analysis and implement corrective actions for all 48 nonconformances including assessing the risk to fielded hardware.

Management Comments

MDA provided responsive comments on the draft of this report and agreed with the five recommendations in the report. Additionally, MDA provided technical and security comments that have been incorporated into this report as appropriate. No further comments are required.

Recommendations Table

Management	Recommendations Requiring Comment	No Additional Comments Required
Director, Missile Defense Agency		A, B.1, B.2, C, and D

INSPECTOR GENERAL
DEPARTMENT OF DEFENSE
4800 MARK CENTER DRIVE
ALEXANDRIA, VIRGINIA 22350-1500

September 8, 2014

MEMORANDUM FOR DIRECTOR, MISSILE DEFENSE AGENCY

SUBJECT: Exoatmospheric Kill Vehicle Quality Assurance and Reliability Assessment – Part A (Project No. DODIG-2014-111)

The DoD Office of Inspector General (OIG) conducted a quality assurance and reliability assessment of the Ground-Based Midcourse Defense (GMD), Exoatmospheric Kill Vehicle (EKV), procured from Raytheon Missile Systems. Our assessment resulted in two reports, Part A and Part B. Part A, assessed the GMD EKV program's quality management system. Part B is classified and provides our reliability assessment of deployed GMD EKV assets.

We found for the GMD EKV that the majority of quality management systems were in compliance. However, the Missile Defense Agency (MDA) was not ensuring that all quality management systems provisions complied with the AS9100C standard which could inadvertently effect mission success. We identified a total of 48 nonconformances that violated the AS9100C standard. The nonconformances indicated that MDA needs to improve EKV quality assurance processes in the following areas: software development and testing, flow down of quality assurance and technical requirements for mission-critical assemblies, and management of the engineering change process for design requirements.

We considered management comments to the draft report when preparing the final report. The comments received from MDA conformed to the requirements of DoD Directive 7650.3; therefore, we do not require additional comments.

We appreciate the courtesies extended to our staff. Please direct questions to Mr. Thomas Bulk at (703) 604-9619 or thomas.bulk@dodig.mil. If you desire, we will provide a formal briefing on the results.

Randolph R. Stone
Deputy Inspector General
Policy and Oversight

Contents

Introduction

Objectives 1

Background 1

Quality Assurance Assessment

AS9100C Quality Management Systems - Requirements for Aviation, Space, and Defense Organizations 9

Raytheon 11

Boeing 15

Corrective Actions Taken to Date 16

Finding A. Software Management Practices 17

Recommendation A – Management Comments and Our Response 17

Finding B. Supply Chain Management 18

Recommendation B.1 – Management Comments and Our Response 18

Recommendation B.2 – Management Comments and Our Response 19

Finding C. Configuration Management 20

Recommendation C – Management Comments and Our Response 20

Finding D. Overall Findings and Recommendations 21

Recommendation D – Management Comments and Our Response 21

Appendixes

Appendix A. Scope and Methodology 22

Appendix B. Prior Coverage 25

Management Comments

Missile Defense Agency 26

Acronyms and Abbreviations 28

INSPECTOR GENERAL

INTEGRITY

EFFICIENCY

DEPARTMENT OF DEFENSE

Introduction

Objectives

Our objective was to perform a quality assurance assessment of the Missile Defense Agency's Ground-Based Midcourse Defense (GMD), Exoatmospheric Kill Vehicle (EKV), which is procured from Raytheon Missile Systems. We conducted the assessment onsite at the GMD Program Office, Huntsville, Alabama, and at Raytheon Missile Systems, Tucson, Arizona. Based on our evaluation of program office data, we determined it necessary to review EKV reliability in conjunction with our quality assurance assessment. Thus, our assessment resulted in two parts:

- Part A (Unclassified): Assess Raytheon conformity to Aerospace Standard (AS)9100C, "Quality Management Systems - Requirements for Aviation, Space and Defense Organizations," contractual quality assurance clauses, and internal quality assurance processes and procedures.
- Part B (Classified): Assess the reliability of deployed assets by evaluating historical manufacturing and quality management system data.

This report is Part A of our assessment; Part B will be classified and released at a later date.

Background

Establishment of Missile Defense Agency

A Secretary of Defense memorandum titled, "Missile Defense Program Direction," January 2, 2002, established a single program to develop an integrated defense capability under the management of Missile Defense Agency (MDA). MDA is responsible for developing the various missile defense programs identified to support an overall Ballistic Missile Defense System (BMDS) (Figure 1).

The GMD is part of the BMDS and is an integral part of the layered defense strategy. According to MDA the GMD's mission is to "provide Combatant Commanders a capability to engage and destroy limited intermediate and long-range ballistic missile threats in the midcourse battle space to protect the U. S. Homeland."

Figure 1. Ballistic Missile Defense System

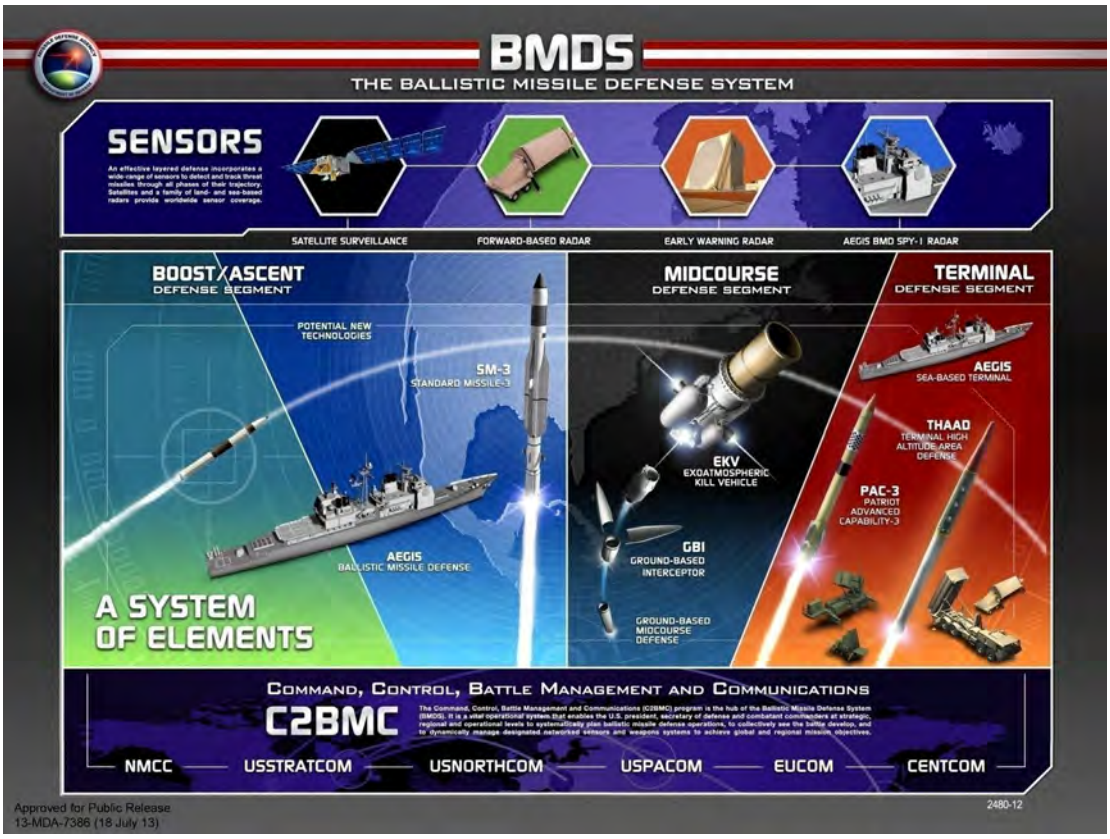

Acquisition Strategy

The Secretary of Defense memorandum of January 2, 2002, states that the BMDS is not subject to the traditional requirements generation process of the Joint Capabilities Integration and Development System. Therefore, MDA was authorized to use non-standard approaches for both acquisition and requirements generation. MDA's acquisition processes, however, were and are required to be consistent with the principles of DoD Directive (DoDD) 5000.01, "The Defense Acquisition System," and DoD Instruction (DoDI) 5000.02, "Operation of the Defense Acquisition System". When the interceptor was acquired, MDA did not have a standardized acquisition process. On January 13, 2009, MDA established its acquisition policy to standardize MDA's acquisition processes. On April 29, 2011 MDA updated its acquisition management policy to reflect standard acquisition lifecycle phases. MDA has subsequently updated its acquisition policy in MDA Directive 5013.01 (August 24, 2012) and MDA Instruction 5013.02-INS (August 24, 2013).

Because of the urgent need and Presidential directive to field a capability, the GMD Program expedited the EKV acquisition process. DoDD 5134.09 requires MDA to manage the BMDS consistent with the principles of DoDI 5000.02. However, DoDD 5134.09 allows an accelerated acquisition and flexible approach to requirements generation and acquisition processes instead of the standard processes identified in DoDI 5000.02. Therefore, the EKV did not go through the milestone decision review process and the product development phase (Engineering and Manufacturing Development). The purpose of the milestone decision review is to carefully assess a program's readiness to proceed to the next acquisition phase and to make a sound investment decision committing the DoD's financial resources. For the product development phase, the program is assessed to ensure that the product design is stable, manufacturing processes are controlled, and the product can perform in the intended operational environment.

GMD Program data indicated that the EKV prototype design was forced into operational capability with minimal design turns, and only those addressing obsolescence were undertaken by the Program. The design turns primarily addressed the most critical obsolescence performance risks versus addressing reliability, producibility, and maintainability for the operational fleet.

Ground-Based Midcourse Defense System

The GMD Program, which is part of the Ballistic Missile Defense System, was initiated in the 1990s to develop a homeland missile defense system against rogue nations. Using space, ground, and shipboard sensors, the GMD battle management system assesses the threat, determines if the threat exists in its battle management space, and launches an interceptor to intercept and destroy the warhead in flight. Today, the GMD system is composed of 30 Ground-Based Interceptors (GBIs) located in missile fields in Fort Greely, Alaska, and Vandenberg Air Force Base, California, with fire control nodes in Colorado and Alaska. A memorandum released in March of 2013 by the Secretary of Defense sought to increase the number of GBIs by 14 for a total of 44.

Figure 2 shows a three-stage GBI with the EKV as the payload. The booster portion of the GBI carries the EKV toward the target's predicted location in space. Once released from the booster, the EKV uses guidance data transmitted from Ground Support and Fire Control System components and onboard sensors to identify and destroy the target warhead. EKV impact is outside the Earth's atmosphere using the direct collision to destroy the target warhead. Boeing is the prime contractor for the GBI and procures the EKV from Raytheon Missile Systems. There are primarily two variants of the EKV system, capability enhancement I (CE-I) and capability enhancement II (CE-II). The CE-I configuration includes connector upgrades from the first prototype to address obsolescence issues. The CE-II version is an upgrade of CE-I to resolve processor obsolescence issues and to enable the EKV to track a greater number of objects. There are other subconfigurations within CE-I and CE-II variants that resulted from resolving design or manufacturing risks.

Figure 2. Ground-Based Interceptor

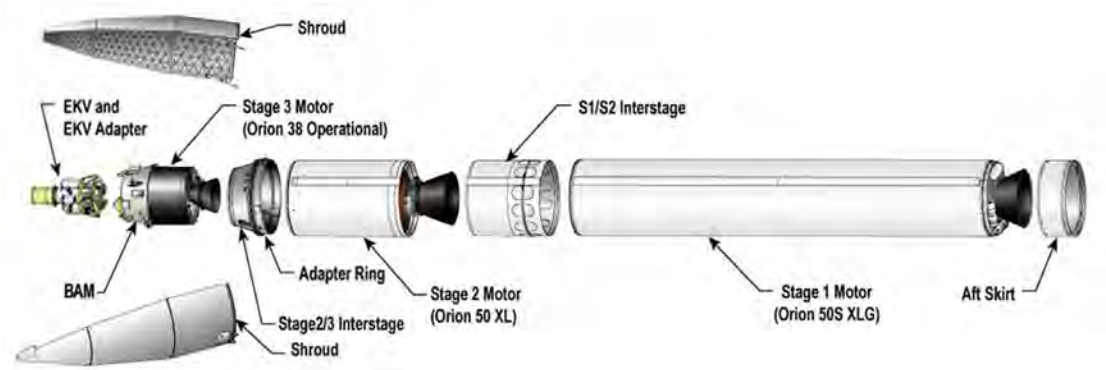

Source: MDA GMD Program Overview, November 4, 2013

GMD Program Schedule Impacts

Expedited Delivery Schedule

National Security Presidential Directive-23 (NSPD-23), "National Policy on Ballistic Missile Defense," December 16, 2002, directed the Department of Defense to deploy a set of initial missile defense capabilities beginning in 2004. NSPD-23 resulted in the fielding of initial missile defense capabilities before rigorous testing was complete to validate performance. Schedule constraints also necessitated the need to field GMD prototype assets.

The current EKV design is the prototype design of 1998 with upgrades for design and manufacturing defects, and obsolescence issues. The immediate need for an initial capability drove an accelerated development process and fielded capability before

EKV performance was fully characterized prior to initial fielding. Requirements were viewed as "goals" with little focus on reliability, producibility, and maintainability requirements, which are integral to strategic systems with a life expectancy similar to GMD.

A combination of cost constraints and failure-driven program restructures has kept the program in a state of change. Schedule and cost priorities drove a culture of "Use-As-Is" leaving the EKV as a manufacturing challenge. With more than 1,800 unique parts, 10,000 pages of work instructions, and 130,000 process steps for the current configuration, EKV repairs and refurbishments are considered by the Program to be costly and problematic and make the EKV susceptible to quality assurance failures.

Flight Tests

Ten flight tests were completed since 2005 with seven tests designed to be intercept tests and three as non-intercept tests. Of the seven intercept tests flown, four were CE-I and three were CE-II configurations. Three of these intercept tests resulted in failures attributable to the EKV. The lessons learned from the failed tests led to a series of hardware and software design changes. Overall, these issues resulted in the GMD Program suspending and slowing production of interceptors.

Flight Test Failures

Until the recent successful FTG-06b intercept flight test completed on June 22, 2014, the GMD Program had been unable to demonstrate a successful CE-II Interceptor test. Flight Test GMD 06 (FTG-06) in January 2010 failed due to a missing lockwire on a CE-II EKV wire harness connector. Work instructions were updated as part of the corrective action to ensure verification of lockwire connectors. GMD added a retest designated as FTG-06a. However, the retest also failed in December 2010 due to the effects of vibration on the EKV guidance system. Due to the flight test failures, MDA halted GMD flight testing, restructured its flight test program, stopped production of the GMD interceptors, and redirected resources to return-to-flight testing activities. A CE-I flight test was conducted in July 2013 (FTG-07) to support the return-to-flight testing activities, which resulted in a test failure. To date, the FTG-07 failure investigation is still ongoing to determine the root cause. The scope of the investigation encompasses the entire EKV and Orbital Boost Vehicle power system. Table 1 and Figure 3 provide a summary of EKV flight test events and failures including those noted in FTG-06, FTG-06a, and FTG-07.

Table 1. EKV Flight Test Events and Failures for CE-I and CE-II

Mission	Type Test	Success	EKV Flight Issue	EKV Corrective Action	Planned Intercept	Version	Date
FT-1	No Target	Yes	Inertial Measurement Unit and Sensor Off Nominal Performance	Software Improvements	No	CE-I	13 Dec 05
FTG-02	Intercept	Yes	Inertial Measurement Unit and Sensor Off Nominal Performance	Hardware and Software Improvements	Yes	CE-I	01 Sep 06
FTG-03	Intercept	N/A	N/A (Target Failure)	N/A	Yes	CE-I	25 May 07
FTG-03a	Intercept	Yes	None	None Required	Yes	CE-I	28 Sep 07
FTG-04	Mission Canceled	N/A	N/A	Hardware Improvements	Yes	CE-I	N/A
FTG-05	Intercept	Yes	Divert System Hardware Anomaly	Hardware Improvements	Yes	CE-I	5 Dec 08
FTG-06	Intercept	No	Quality Issue and off nominal sensor performance	Hardware Improvements	Yes	CE-II	31 Jan 10
BVT-1	No Target	Yes	Off Nominal Sensor Performance	Assessing 2-stage interceptor design	No	CE-I	6 Jun 10
FTG-06a	Intercept	No	Off Nominal Inertial Measurement Unit performance	Hardware and Software Improvements	Yes	CE-II	15 Dec 10
CTV-01	No Target	Yes	No	N/A	No	CE-II	26 Jan 13
FTG-07	Intercept	No	Yes	Investigation ongoing	Yes	CE-I	5 Jul 13
FTG-06b	Intercept	Yes	TBD (Post Test Analysis Ongoing)	TBD (Post Test Analysis Ongoing)	Yes	CE-II	22 Jun 14

Source: GMD EKV DoD IG Quality Assurance Assessment Brief, November 4, 2013

Legend

BVT Boost Vehicle Test
CE Capability Enhancement
CTV Controlled Test Vehicle
FT Flight Test
FTG Flight Test Ground-Based Interceptor
TBD To Be Determined

Figure 3. EKV Flight Test Events and Failures CE-I and CE-II

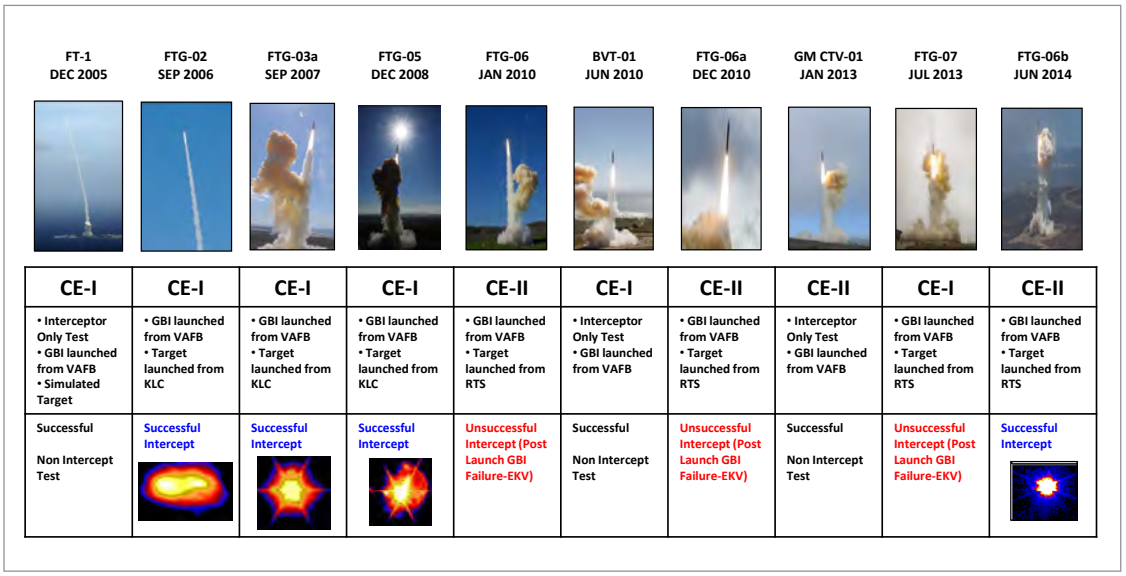

Source: GMD Progam Office, August 4, 2014

Legend

BVT	Boost Vehicle Test	GBI	Ground-Based Interceptor
CE	Capability Enhancement	KLC	Kodiak Launch Complex, Alaska
CTV	Controlled Test Vehicle	RTS	Reagon Test Site
FT	Flight Test	VAFB	Vandenberg Air Force Base, California
FTG	Flight Test Ground-Based Interceptor		

Contract

The Boeing Company was awarded the prime contract (HQ0006-01-C-0001) on January 1, 2001, for evolutionary development, integration, and testing of a cost-effective GMD system. Boeing later awarded Raytheon Missile Systems a subcontract for the EKV. Boeing required Raytheon to comply with AS9100 Quality Standards in accordance with statement of work D743-11961-2 dated June 7, 2011. There were originally 33 Test Bed, CE-I EKVs that were delivered from 2004 to October of 2007 and 24 CE-II EKVs planned to be delivered between 2008 and 2015, of which 16 have been delivered to date. On December 30, 2011, Boeing was awarded a Development and Sustainment Contract (DSC), HQ0147-12-C-0004, to develop new capabilities, manufacture, test, and provide operational support of the GMD system. Boeing then awarded Raytheon the subcontract for the EKV in 2012. The contract scope includes resolving reliability and obsolescence issues; extending the EKV service life; improving fleet reliability with new CE-II Block 1 EKVs and CE-I

upgrades; increasing software and modeling and simulation capabilities; and providing EKV operations and flight test support through 2018. Boeing and mission-critical suppliers, including Raytheon, were required to meet AS9100 and the MDA Mission Assurance Provisions (MAP).

The MAP provides a measureable standardized set of Quality, Safety, and Mission Assurance requirements to be applied to those suppliers developing mission and safety critical items. Under the Development and Sustainment Contract, Raytheon is required to provide a MAP Requirement Applicability Matrix (RAM) that reflects MAP implementation to ensure planning and execution of the Development and Sustainment Contract (HQ0147-12-C-0004) is consistent with the MDA Assurance Provisions. The RAM specifies applicability and approaches to MAP requirements.

Quality Assurance Assessment

AS9100C Quality Management Systems - Requirements for Aviation, Space, and Defense Organizations

We evaluated the Exoatmospheric Kill Vehicle quality assurance processes at Raytheon Missile Systems, Tucson, Arizona, to the AS9100C Quality Management System standard, as implemented by MAP Revision A. The majority of systems were in compliance with AS9100C. However, some areas needed improvement. We identified a total of 48 nonconformances as violations of the AS9100C standard. Based on these nonconformances, we determined that MDA, Boeing, and Raytheon were not ensuring that all the quality management systems were in compliance with the AS9100C standard. Based on AS9101D definition, we classified each of the nonconformances as major nonconformances or minor nonconformances. Each nonconformance received an additional technical review for accuracy and classification. This report focuses on the major nonconformances.

Although we identified a total of 48 nonconformances, some systems were compliant as stated above. Facility shop floor operations that included processes such as tool control, foreign object debris control, and electrostatic discharge prevention were in place and controlled. The electronic manufacturing process documentation system appeared to ensure that out-of-sequence work and manufacturing liens (controls on incomplete or nonconforming material) were addressed. Integration of the EKV was done using clean room operations, which is typical of high reliability space programs.

In accordance with AS9101D (Quality Management Systems Audit Requirements for Aviation, Space, and Defense Organizations) standard, a major nonconformance is a nonfulfillment of a requirement that is likely to result in the failure of the quality management system or reduce its ability to ensure controlled processes or compliant products/services. A minor nonconformance is a nonfulfillment of a requirement that is not likely to result in the failure of the quality management system or reduce its ability to ensure controlled processes or compliant products or services.

Table 2 shows the breakdown of major and minor nonconformances from the assessment.

Table 2. Major/Minor Nonconformances for Each Organization

Organization	Major	Minor
Raytheon	15	25
Boeing	6	1
MDA GMD Program Office	1	0

Shown in Figure 4 are the nonconformances by AS9100C clause and affected organization.

Figure 4. Nonconformances by AS9100C Clause

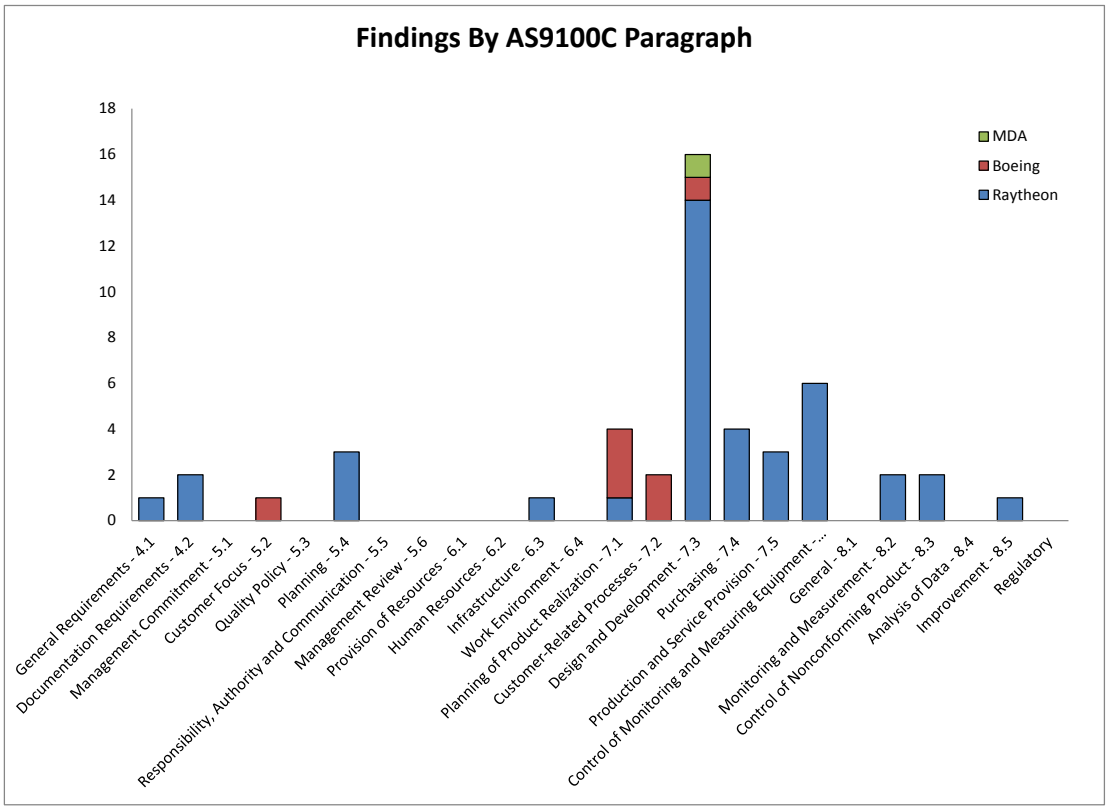

The following sections discuss major nonconformances or an aggregate of minor nonconformances considered collectively to constitute greater risk.

Raytheon

Design and Development (7.3)

Design and Development Planning (7.3.1). Raytheon was not compliant with the required embedded coding standard. Programmers used lower case letters rather than the required uppercase letters when declaring alphanumeric hexadecimal numbers. Upper case letters are easier to differentiate from numbers and vice versa, for example, the letter "l" could be confused with the number "1." Not following the coding standard poses a performance risk to future code modifications or maintenance. Another nonconformance noted that the number of executable statements exceeded the maximum of 600 statements as allowed by the EKV Coding Standard for code files. This included the health and status test code file of the kill vehicle mission-critical hardware, in-flight control software, the interrupt management and processing file, and the kill vehicle communication processing file. File sizes that exceed established standards could impact execution times and result in degraded performance and maintenance.

Although Raytheon had information assurance processes in place to comply with DD Form 254 and DoD 5220.22-M, Raytheon did not have processes in place that comply with DoD Information Assurance Certification and Accreditation Process as required by DoDI 8500.2, "Information Assurance." This increases EKV information risk of unauthorized access, information inaccuracy and inconsistency, and data unavailability. Another nonconformance identified that some of the required safety critical software test cases were not conducted for CE-I Embedded Software Build 20.8, Delta Formal Qualification Testing. Only 10 out of 30 of the required test cases were conducted. Formal qualification testing is performed to fully verify software performance under all possible conditions or scenarios. Failure to perform full qualification testing can lead to loss or significant degradation of the mission.

Design and Development Inputs (7.3.2). Raytheon's Failure, Modes, Effects, and Criticality Analysis (FMECA) report did not reflect the current EKV design. The critical items list contained legacy part numbers, and had not been updated to reflect the current design. Several of those critical items were no longer valid due to design changes with the Inertial Measurement Unit. FMECA is an analytical method

that is instrumental in the design process to identify failure modes and mitigate risks. An inaccurate FMECA can result in not identifying failure modes that should be mitigated. The FMECA should be updated and or assessed for each configuration change to prevent unintended consequences.

Design and Development Verification (7.3.5). There was no evidence that some software unit test results were evaluated for requirements traceability, internal and external consistency of requirements, test coverage, compliance to work instructions, feasibility of software integration and testing, and feasibility of operation and maintenance. Evaluating these items is essential to ensuring there are no quality escapes that will degrade functionality, performance, and maintenance of the software.

Control of Design and Development Changes (7.3.7). Raytheon inappropriately used the waiver and deviation process to change the production baselines for some CE-I and CE-II subcomponents. Some of the waivers and deviations were incorrectly classified as minor rather than major; therefore, additional engineering analysis by Boeing or MDA did not occur. A change to the production baseline without the formal engineering change process could impact product reliability.

Purchasing (7.4)

Purchasing Process (7.4.1). The supplier management plan for the Development and Sustainment Contract had not been approved. The Supplier Management Plan identifies the criticality of items used on the EKV as well as the procurement information for long lead time items. This is the first contract with full implementation of the MDA Mission Assurance Provisions. The MDA Mission Assurance Provisions would ensure design, manufacturing, test, and quality requirements were flowed down to all mission-critical suppliers. Without the supplier management plan identifying mission-critical suppliers, there is no assurance that essential requirements were flowed down.

Purchasing Information (7.4.2). Raytheon did not always provide mission-critical item information to its suppliers. For example, Raytheon did not identify all critical items within its product data management system; and critical item information was not always included in purchasing orders to subtier suppliers. Mission-critical hardware and software items require more stringent controls to ensure product reliability and safety. Designation of an assembly as a mission-critical item invokes additional requirements, such as configuration audits, first article test and inspection,

piece part traceability, and further process controls and monitoring. If the supply chain is unaware that components or assemblies are critical items, then appropriate requirements will not be imposed.

Validation of Purchased Product (7.4.3). Raytheon's Hardware Acceptance Review Checklists are used to identify the status of any open or unresolved actions against hardware and software. We found several reports had not been properly closed. For example, the Hardware Acceptance Review Checklist for an inertial measurement unit, shipped from Northrop Grumman to Raytheon, did not identify whether that unit had been accepted or rejected. The quality note on the purchase order required the Raytheon representative at Northrop Grumman to accept or reject the Hardware Acceptance Review Checklist. Instead, this unit was shipped using a "ship at risk" contract letter before completion of the Hardware Acceptance Review Checklist. This poses a risk of incorporating unresolved quality issues into the next higher assembly.

Production and Service Provisions (7.5)

Control of Production and Service Provision (7.5.1). During the inspection we found an instance where an operation was stopped because the parts kit, which went through the kit audit process, contained a screw without threads. Further review of the kitting process identified that required verifications of kitted hardware were not being thoroughly conducted and completed. It was also noted that Raytheon instructions did not sufficiently describe the kit audit process. A breakdown in rigor and adequately documented processes will result in producing nonconforming parts and material being issued to the production floor for buildup of EKVs.

Preservation of Product (7.5.5). Raytheon's shipping requirements and processes for the Inertial Measurement Unit (IMU) were not sufficient. The IMU specification did not include a shipping requirement for prohibition against X-ray inspection during commercial flight transportation. Raytheon did not have a documented process to prevent X-ray overexposure, and since the IMU may be damaged by prolonged or numerous X-ray exposures, special transportation instructions are necessary for product preservation.

Monitoring and Measuring Equipment (8.2)

Raytheon was not meeting software defect containment requirements. Software defect containment ensures that software issues are detected and corrected before going to the next phase of software development. The defect containment per-phase goal was set between 90 and 95 percent; however, for March 2013, the actual defect

containment during each phase was as follows: requirements phase 42 percent; design phase 39 percent; the code/unit test phase 34 percent; and integration test phase 38 percent. Raytheon also did not have any information on corrective actions taken to correct the low defect containment. The cost and time to correct defects increases exponentially as time elapses from the time defects are introduced. Lack of immediate corrective action increases the risk of defects remaining in the software as well as potential schedule slips.

Control of Nonconforming Product (8.3)

Boeing and Raytheon did not obtain MDA approval for some waivers and deviations that were classified as "critical" or "major." Three deviations were noted for Payload 52 that included modifications to the Isolated IMU, adapter plate, and accelerometers, as well as a fourth deviation for the use of silver plated copper wire. In addition, Boeing had not approved the technical adequacy of the engineering disposition, but had concurred in classification only. Without MDA's approval for major deviations, Raytheon may be delivering hardware that does not meet requirements. Also, Quality Notifications were not always documented for nonconformances generated on Manufacturing Lien Authorizations (MLAs). The MLA is an authorization to allow the movement of an incomplete item into production. The Raytheon MLA instruction states, "the MLA process is NEVER used to process hardware with discrepancies, unless used in conjunction with a Delayed Disposition." We noted several examples where nonconformances were documented on MLAs but did not have associated Quality Notifications. We also noted several examples of Quality Notifications that were written but were not identified within the MLA. Without properly documenting hardware issues on Quality Notifications, these issues may not receive adequate engineering review and disposition. As a result, nonconformances may circumvent the engineering review board and material review board processes. Approval of deviations ensures that MDA is aware of any potential impacts to the system that could result from incorporation of hardware or software that is not produced to specifications.

Boeing

Our assessment of the EKV at Raytheon also included review of Boeing's management of Raytheon as its supplier.

Customer Focus (5.2).

Boeing had approved modifications to the Raytheon Mission Assurance Provisions Requirements Applicability Matrix even though there was inadequate rationale to justify the modifications, particularly for new and modified hardware and software. Inadequate justifications existed for the following requirements: Sneak Circuit Analysis, Qualification/Re-Qualification Test Program, Workmanship Standards, Product Identification and Handling, System Safety Program Plan, Design and Development of Computer Systems, and Interface Design Requirements. The purpose of the Requirements Applicability Matrix was for Raytheon to show Boeing how they met the intent of the MDA Mission Assurance Provisions. Modifications and, or tailoring of the requirements is allowed provided that a sound engineering rationale is provided. Changes to mission-critical requirements without adequate rationale may result in a product that does not meet customer requirements and increased program performance, cost, and schedule risks.

Planning of Product Realization (7.1)

Configuration Management (7.1.3). Boeing was allowing design changes without using the appropriate engineering documentation necessary to control the configuration changes of the EKV baseline. Boeing deferred requirements indefinitely, exempting requirements through a contract letter without the rigor of established change management processes, and incorrectly recategorized waiver requests. These conditions can also result in Boeing delivering products that do not meet requirements.

Design and Development (7.3)

Boeing's critical supplier list did not include all the mission-critical suppliers that Raytheon identified as "critical suppliers." These included suppliers for harnesses, circuit card assemblies, aft covers, and beamsplitters. Suppliers of critical items require additional controls and oversight to include flowdown of MDA assurance provisions, prework authorization reviews, postaward reviews, and product and process verification assessments. If suppliers of mission-critical items are not included on the critical supplier list, the additional controls and oversight required to ensure product integrity of the parts and overall system will not be implemented and this may lead to quality escapes and performance degradation.

Corrective Actions Taken to Date

According to the GMD Program Office, they have prepared corrective action plans for the nonconformances identified. MDA, Boeing, and Raytheon are working together to ensure that all of the findings and recommendations are understood, a root cause analysis is performed, and corrective action plans are initiated. Table 3 shows the status of corrective action plans for each site as of July 24, 2014.

Table 3. Contractor Nonconformance Closeout Status

Responsible Contractor	Nonconformances	In Work	Complete
Boeing	7	0	7
Raytheon	40	4	36
GMD Program Office	1	0	1
Total	48	4	44

Source: GMD Program Office, July 24, 2014

Finding A

Software Management Practices

We found a significant number of AS9100C nonconformances related to software development and testing. Boeing and Raytheon were not ensuring that software development processes and testing were sufficient. This lack of process discipline and controls could result in system reliability risks.

The significant number of software nonconformances indicated a lack of process discipline:

- Software Development – Raytheon did not always adhere to all software coding conventions and standards.
- Corrective Action and Verification – Raytheon was not meeting software defect containment requirements and did not take corrective action.
- Software Testing – For one EKV software release, not all required safety critical software test cases were conducted for the CE-I formal delta qualification testing.

Recommendation A – Management Comments and Our Response

We recommend that the Director, Missile Defense Agency ensure software development processes are fully documented, implemented, and enforced throughout the Exoatmospheric Kill Vehicle supply chain.

Director, Missile Defense Agency

Director, Missile Defense Agency agreed and projects that by the first quarter of fiscal year 2015, MDA will correct and effectively implement actions to address weakness within software development, verification, and validation process; the training program; and the testing of critical safety items.

Our Response

The Director's comments are responsive. We request that MDA notify the OIG when the actions are complete. No further comments are required.

Finding B

Supply Chain Management

Boeing and Raytheon supplier management processes did not meet AS9100C quality standards. They did not ensure all quality assurance and technical requirements for mission-critical assemblies flowed down to the supply chain and were verified. This could result in suppliers delivering nonconforming hardware or software, thus reducing system reliability.

We noted a significant number of nonconformances in the following areas.

- Supply Chain Management Planning – Raytheon did not have an approved Supplier Management Plan for the Development and Sustainment Contract.
- Design and Development Requirements – Boeing and Raytheon did not always flow down all necessary quality, safety, and mission assurance requirements for critical item suppliers.
- Verification of Purchased Product – Raytheon did not complete the Hardware Acceptance Review Checklist process before allowing hardware to be shipped.

Recommendation B.1 – Management Comments and Our Response

We recommend that the Director, Missile Defense Agency ensure all suppliers of critical items are identified as critical suppliers, receive the necessary contractual requirements, and requirements are verified throughout the supply chain.

Director, Missile Defense Agency

The Director, Missile Defense Agency agreed and stated that MDA is identifying suppliers of critical items to ensure the flow down of quality and mission assurance requirement to those suppliers.

Our Response

The Director's comments are responsive. We request that MDA notify the OIG when the actions are complete. No further comments are required.

Recommendation B.2 – Management Comments and Our Response

We recommend that the Director, Missile Defense Agency ensure fielded hardware affected by an insufficient Hardware Acceptance Review Checklist process is assessed for risk.

Director, Missile Defense Agency

The Director, Missile Defense Agency agreed and stated that MDA is conducting a risk assessment on fielded hardware affected by insufficient requirements and the results of the assessment will be incorporate into the MDA continuous improvement plan.

Our Response

The Director's comments are responsive. We request that MDA notify the OIG when the actions are complete. No further comments are required.

Finding C

Configuration Management

Boeing and Raytheon management and execution of design variances and engineering changes did not meet AS9100C requirements. Boeing and Raytheon were not adhering to configuration management processes, specifically with respect to management of change processes for design requirements. The lack of adherence to these disciplines can result in the fielding of an unapproved configuration.

We noted a significant number of nonconformances in the following areas.

- Design Variance and Engineering Changes – Raytheon was using waiver and deviation process instead of the engineering change process to modify the production baselines. Additionally, Boeing used contract letters to implement changes to the design and performance specification instead of the appropriate change management process. Not following the required process could increase the risk of ineffective change control.
- Classification of Variance – Boeing and Raytheon were incorrectly classifying waivers and deviations, resulting in changes to the baseline without appropriate approval.

Recommendation C – Management Comments and Our Response

We recommend that the Director, Missile Defense Agency ensure design and configuration changes do not circumvent the Missile Defense Agency Assurance Provisions for configuration management.

Director, Missile Defense Agency

The Director, Missile Defense Agency, agreed and stated that MDA is updating the Configuration Management process to incorporate omitted engineering change processes, properly characterize major and minor variances within the process, and actively manage the waiver/deviation process.

Our Response

The Director's comments are responsive. We request that MDA notify the OIG when the actions are complete. No further comments are required.

Finding D

Overall Findings and Recommendations

We identified a total of 48 nonconformances that were violations of the AS9100C standard. Based on these nonconformances, we determined that MDA, Boeing, and Raytheon were not ensuring that the all quality management systems were in compliance with the AS9100C standard. These nonconformances could result in the production of nonconforming hardware and software which could effect mission success.

The nonconformances represent very specific quality management system issues requiring resolution. It appears, from the data provided, that the GMD Program Office has a process to identify root causes and put corrective action plans in place, which we acknowledge and appreciate. It is our professional judgment that the following three primary findings represent the most problematic areas requiring special attention: Software Management Practices, Supply Chain Management, and Configuration Management. Although we found the majority of quality management systems in compliance with the AS9100C standard, the importance of these three quality assurance categories cannot be overstated in terms of improving reliability growth.

Recommendation D – Management Comments and Our Response

We recommend that the Director, Missile Defense Agency conduct an effective root cause analysis and implement corrective actions for all 48 nonconformances including assessing the risk to fielded hardware.

Director, Missile Defense Agency

The Director, Missile Defense Agency, agreed and stated that MDA is conducting a root cause analysis and developing corrective actions for deficiencies identified during the onsite assessment and will assess the risk to fielded hardware.

Our Response

The Director's comments are responsive. We request that MDA notify the OIG when the actions are complete. No further comments are required.

Appendix A

Scope and Methodology

We conducted this assessment from September 2013, through August 2014, in accordance with the Council of the Inspectors General on Integrity and Efficiency, "Quality Standards for Inspection and Evaluation." Those standards require that we plan and perform the assessment to obtain sufficient, appropriate evidence to provide a reasonable basis for our findings and conclusions based on our assessment objectives. We believe that the evidence obtained provides a reasonable basis for our findings and conclusions based on our assessment objectives.

To evaluate the management of the EKV quality assurance program, we performed a quality assurance assessment of the MDA GMD Program Office in Huntsville, Alabama, and Raytheon Missile Systems in Tucson, Arizona. To review the quality management system, our assessments focused on the following:

- Applicable Statutory/regulatory requirements
- Contractual quality management system (AS9100C)
- Internal quality assurance processes and procedures

We reviewed program office documentation, including EKV configuration differences, field asset reliability data, and program office risk management information. At Raytheon, we reviewed contractual requirements, manufacturing and quality management system documentation, failure reporting data, and waivers and deviations. Because both CE-I and CE-II configurations are in use, we compared select builds to note changes in the quality management system processes and procedures.

We issued findings and recommendations commensurate with our assessment of the quality assurance and reliability of the GMD, EKV, which was procured through contract effort. We did not assess or comment upon the consequences of our findings as they relate to the contractual rights and obligations of the parties involved nor any resulting contracting actions that may be available to MDA.

DoD OIG Assessment Criteria

AS 9100C, Quality Management Systems - Requirements for Aviation, Space and Defense Organizations

AS9100C was contractually imposed on Boeing and flowed down to Raytheon for the DSC, awarded in June 2012, by way of the MDA Assurance Provisions (MAP). The MAP establishes requirements, standards, and policies for quality, safety, and mission assurance. Therefore, we used AS9100C standard as our assessment criteria. The AS9100C standard breaks down quality assurance requirements into five major clauses:

- Quality Management System;
- Management Responsibility;
- Resource Management;
- Product Realization, and
- Measurement, Analysis, and Improvement

The Quality Management System, Management Responsibility, and Resource Management clauses of AS9100C require the organization to have a quality assurance management organization that has all the resources and authority to affect the end-item quality of the product. In addition, these clauses require the organization to have a quality assurance manual with strict controls over all documentation, data, and procedures that affect the quality of the product. Product Realization covers the activities and processes necessary to bring a product into existence. Measurement, Analysis, and Improvement requires the organization to ensure the product continuously improves. The clause includes customer satisfaction, internal audit, monitoring and measuring processes and product, and control of nonconforming products to ensure continual improvement.

Product realization is broken down further in AS9100C as follows:

- Planning of Product Realization,
- Customer-Related Processes,
- Design and Development,

- Purchasing,
- Production and Service Provision, and
- Control of Monitoring and Measuring Equipment

Planning of Product Realization requires the organization to develop processes needed for design and development of product and includes elements such as procedures, quality assurance records, resource requirements, safety and reliability programs, and inspection and test. Customer-Related Process requires the organization to determine customer requirements both specified and derived. These requirements include technical, statutory, and regulatory requirements. Design and Development includes requirements that cover planning, inputs, outputs, review, verification, validation, and control of changes as related to design and development. Purchasing requires the organization to ensure that the purchased product conforms to specified purchase requirements and that all products purchased from suppliers are verified against purchase agreement requirements. The Production and Service Provision requires the organization to ensure that production is accomplished under controlled conditions using drawings and specifications, work instructions, production tools and software programs, monitoring and measuring equipment, and evidence that all production and inspection/verification operations have been completed as planned. Control of Monitoring and Measuring Equipment requires the organization to ensure that devices used for determining product compliance with performance characteristics are properly maintained to provide assurance of credible measurements.

Use of Technical Assistance

Quality assurance engineers and quality assurance specialists with a background in defense assisted in the assessment. We established teams of subject matter experts who assessed to the AS9100C Quality Management System standard. The subject matter expert teams consisted of 17 quality assurance engineers who have received AS9100C certification training, and have an average of 17 years of quality assurance audit experience.

Appendix B

Prior Coverage

During the last 5 years, the Government Accountability Office (GAO) issued eight reports discussing the Ground-Based Midcourse Defense, Exoatmospheric Kill Vehicle. Unrestricted GAO reports can be accessed over the Internet at http://www.gao.gov.

GAO

Report No. GAO-13-294SP, "Defense Acquisitions: Assessments of Selected Weapon Programs," March 28, 2013

Report No. GAO-12-486, "Missile Defense: Opportunity Exists to Strengthen Acquisitions by Reducing Concurrency," April 20, 2012

Report No. GAO-12-400SP, "Defense Acquisitions: Assessments of Selected Weapon Programs," March 29, 2012

Report No. GAO-11-555T, "Missile Defense: Actions Needed to Improve Transparency and Accountability," April 13, 2011

Report No. GAO-11-233SP, "Defense Acquisitions: Assessments of Selected Weapon Programs," March 29, 2011

Report No. GAO-11-372, "Missile Defense: Actions Needed to Improve Transparency and Accountability," March 24, 2011

Report No. GAO-10-311, "Defense Acquisitions: Missile Defense Transition Provides Opportunity to Strengthen Acquisition Approach," February 25, 2010

Report No. GAO-09-403T, "Defense Acquisitions: Charting a Course for Improved Missile Defense Testing," February 25, 2009

Management Comments

Missile Defense Agency

DoD IG Project DTOTAD-0005
Exoatmospheric Kill Vehicle Quality Assurance Assessment
DRAFT REPORT - Part A
July 2, 2014

Missile Defense Agency Response to DoD IG Recommendations

RECOMMENDATIONS

Recommendation A: Ensure software development processes are fully documented, implemented, and enforced throughout the EKV supply chain.

MDA Response to Recommendation A: **Concur.**
Those portions of the Software (SW) development processes that may lack verification and validation process, suitable training program, proper SW Coding, and critical safety testing will be corrected and effectively implemented. MDA corrective actions will be monitored and reviewed as a part of the Contractor Performance Assessment Report (CPAR) and the Quality Assurance Surveillance Plan (QASP) to ensure conformance and commitment to the corrective actions. The MDA corrective actions findings regarding the software development processes are projected to be completed by 1QFY15.

Recommendation B1: Ensure all suppliers of critical items are identified as critical suppliers receive the necessary contractual requirements, and requirements are verified throughout the supply chain.

MDA Response to Recommendation B1: **Concur.**
MDA will correct and effectively implement: Quality and mission assurance requirement flow-down for critical suppliers that may lack all critical items identification and critical information contained in purchasing orders to sub-tier suppliers; supplier management conformed to approved supplier management plan for the Development and Sustainment Contract; and verification of purchased items. MDA is ensuring suppliers of critical items are identified as critical suppliers and receive the necessary contractual requirements and the requirements are verified throughout the supply chain. The corrective actions will be monitored and reviewed as a part of the CPAR and the QASP to ensure conformance and commitment to the corrective actions.

Recommendation B2: Ensure Fielded hardware affected by insufficient requirements is assessed for risk.

MDA Response to Recommendation B2: **Concur.**
MDA is ensuring fielded hardware affected by insufficient requirements is assessed for risks. The corrective actions associated with this recommendation will be monitored and reviewed as a part of the CPAR and the QASP to ensure conformance and commitment to the corrective actions. Results of the risk management processes shall be used for continuous process improvement.

Page 1 of 2

Missile Defense Agency (cont'd)

Recommendation C: Ensure design and configuration changes do not circumvent the Missile Defense Agency Assurance Provisions for configuration management.

MDA Response to Recommendation C: **Concur**
The Configuration Management process will incorporate any omitted engineering change processes, properly characterize major and minor variances, and actively manage the waiver/deviation process. MDA is ensuring that the design and configuration changes meet the Missile Defense Agency Assurance Provisions (MAP) for configuration management. The corrective actions associated with this recommendation will be monitored and reviewed as a part of the CPAR and the QASP to ensure conformance and commitment to the corrective actions.

Recommendation D: Conduct effective root cause and corrective actions for all deficiencies including assessing the risk to fielded hardware.

MDA Response to Recommendation D: **Concur**
MDA is conducting root cause analysis and developing corrective actions for deficiencies including assessing the risk to fielded hardware. The corrective actions associated with this recommendation will be monitored and reviewed as a part of the CPAR and the QASP to ensure conformance and commitment to the corrective actions. The projected completion date is 1QFY15.

Page 2 of 2

Acronyms and Abbreviations

AS	Aerospace Standard
BMDS	Ballistic Missile Defense System
CE	Capability Enhancement
DoDD	Department of Defense Directive
DoDI	Department of Defense Instruction
DSC	Development and Sustainment Contract
EKV	Exoatmospheric Kill Vehicle
FMECA	Failure, Modes, Effects, and Criticality Analysis
FTG	Flight Test Ground-Based Interceptor
GBI	Ground-Based Interceptor
GMD	Ground-Based Midcourse Defense
IMU	Inertial Measurement Unit
MAP	MDA Assurance Provisions
MDA	Missile Defense Agency
MLA	Manufacturing Lien Authorization
NSPD	National Security Presidential Directive
OIG	Office of Inspector General
QMS	Quality Management Systems

Whistleblower Protection
U.S. Department of Defense

The Whistleblower Protection Enhancement Act of 2012 requires the Inspector General to designate a Whistleblower Protection Ombudsman to educate agency employees about prohibitions on retaliation, and rights and remedies against retaliation for protected disclosures. The designated ombudsman is the DoD Hotline Director. For more information on your rights and remedies against retaliation, visit www.dodig.mil/programs/whistleblower.

For more information about DoD IG reports or activities, please contact us:

Congressional Liaison
congressional@dodig.mil; 703.604.8324

Media Contact
public.affairs@dodig.mil; 703.604.8324

Monthly Update
dodigconnect-request@listserve.com

Reports Mailing List
dodig_report@listserve.com

Twitter
twitter.com/DoD_IG

DoD Hotline
dodig.mil/hotline

DEPARTMENT OF DEFENSE | INSPECTOR GENERAL

4800 Mark Center Drive
Alexandria, VA 22350-1500
www.dodig.mil
Defense Hotline 1.800.424.9098